Town Standards
Index
(select to view)

• Collector Street Cross Section - Standard #3.00

• Collector Street Cross Section w/ Bike Lanes - Standard #3.01

• Local Street Cross Section - Standard #3.02

• Local Street Cross Section (No Curb) - Standard #3.03

• Industrial Street Cross Section - Standard #3.04

• 4-Lane Divided Street Cross Section - Standard #3.05

• Alley Cross Section - Standard #3.06

• Greenway Asphalt Path Cross Section - Standard #3.07

• Utility Trench Pavement Repair - Standard #3.08

• Typical Pavement Repair - Standard #3.09

• Standard Driveway Turnout - Standard #3.12

• Standard Curb & Gutter - Standard #3.13

• Median Curb - Standard #3.14

• Rolled Curb - Standard #3.15

• Residential Cul-de-sac - Standard #3.16

• Barricade for Dead End Streets - Standard #3.17

• Standard Concrete Drop Inlet - Standard #4.10

• Standard Brick Drop Inlet - Standard #4.11

• Standard Drop Inlet Grates - Standard #4.12

• Standard Concrete Catch Basin - Standard #4.13A

• Standard Concrete Catch Basin - Standard #4.13B

• Standard Brick Catch Basin - Standard #4.14A

• Standard Brick Catch Basin - Standard #4.14B

• HDPE Pipe - Standard #4.16

• Trench Installation for HDPE - Standard #4.16A

• Polypropylene Pipe - Standard #4.17

• Trench Installation for Polypropylene - Standard #4.17A

- Dissimilar Pipe Connections to RCP - Standard #4.18
- Curb Ramps - Standard #5.00
- Curb Ramps - New Development - Standard #5.01
- Curb Ramps - New Development - Standard #5.02
- Curb Ramps - New Development - Standard #5.03
- Curb Ramps - Retrofit - Standard #5.04
- Curb Ramps - Retrofit - Standard #5.05
- Curb Ramps - Retrofit - Shared Flare - Standard #5.06
- Curb Ramps - Notes - Standard #5.07
- Curb Ramps - Median Island Cut-Throughs - Standard #5.08
- Pedestrian Refuge - Standard #5.09
- Locations of Detectable Warning Surfaces - Standard #5.10
- Detectable Warning Surface - Pavers - Standard #5.11
- Detectable Warning Surface - Surface Applied - Standard #5.12 (Retrofit Only)
- Detectable Warning Surface - Cast-in-Place - Standard #5.13

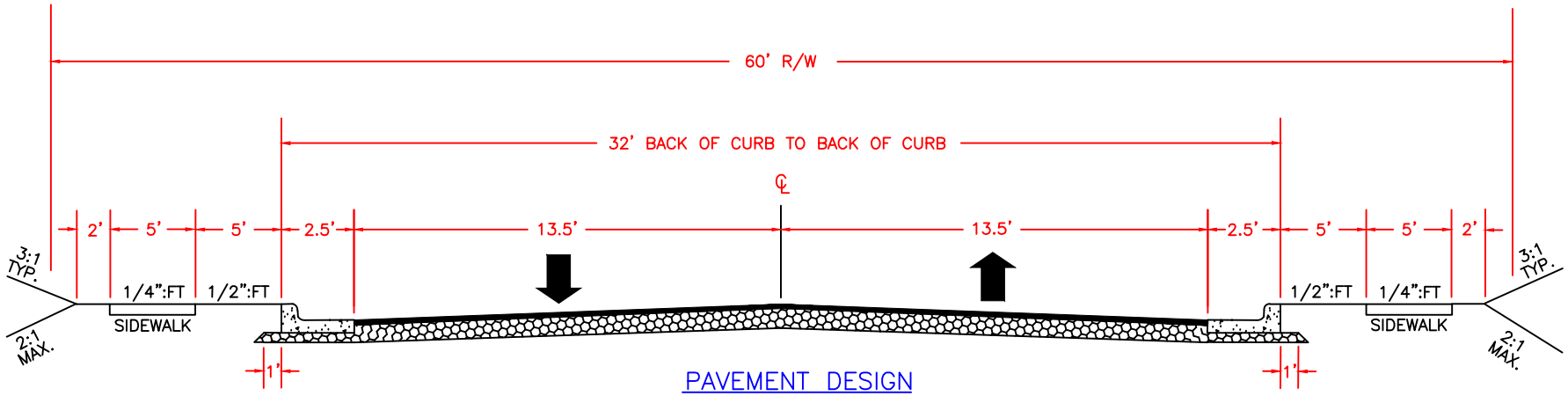

PAVEMENT DESIGN

MINOR COLLECTOR STREET 10" – ABC, 3" – S9.5B

MINOR COLLECTOR STREET SECTION

TOWN OF GARNER, N.C.

DRAWN BY: C. NIX

APPROVED BY: C. JOHNSON

REVISED 3/2019

STD. NO. 3.00

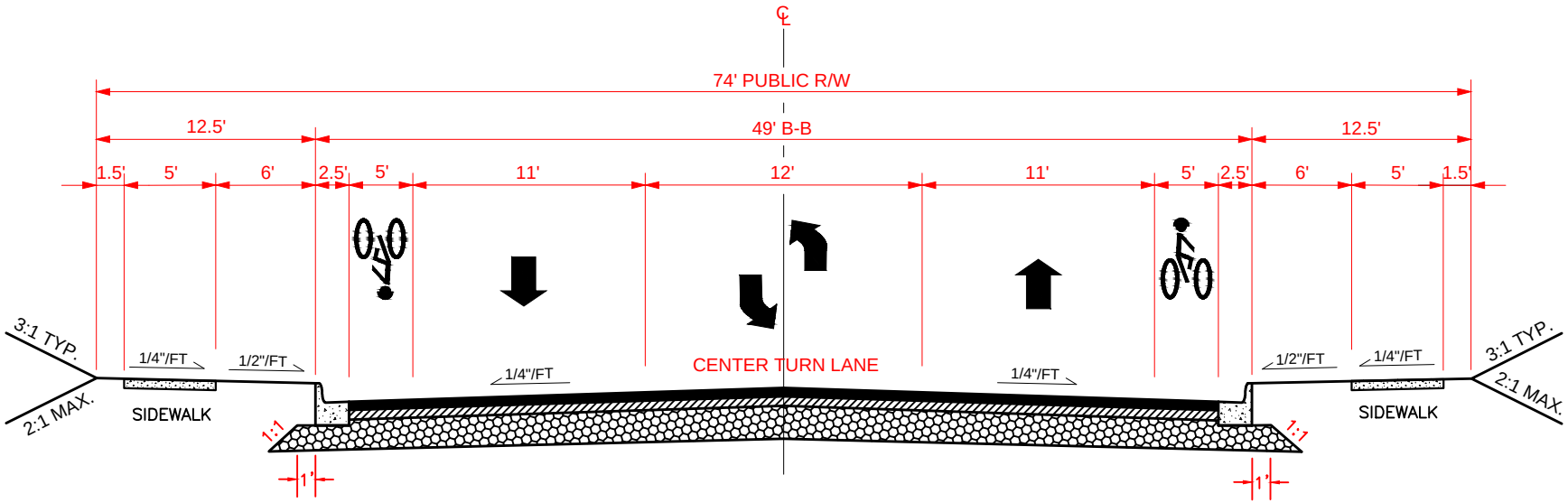

PAVEMENT DESIGN

MAJOR COLLECTOR STREET 8" – ABC, 2.5" – I19.0C, 2.5" – S9.5B

MAJOR COLLECTOR STREET W/ BIKE LANES

TOWN OF GARNER, N.C.

DRAWN BY: C. NIX

APPROVED BY: C. JOHNSON

REVISED 3/2019

STD. NO. 3.01

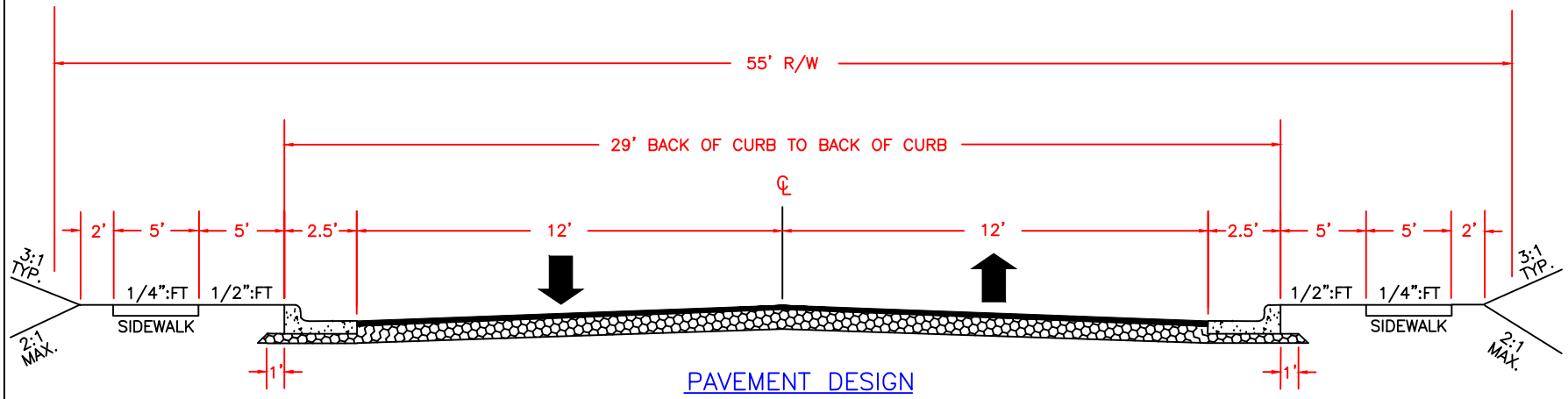

PAVEMENT DESIGN

LOCAL STREET 8" – ABC, 2.5" – S9.5B

LOCAL STREET SECTION

TOWN OF GARNER, N.C.

DRAWN BY: C. NIX

APPROVED BY: C. JOHNSON

REVISED 3/2019

STD. NO. 3.02

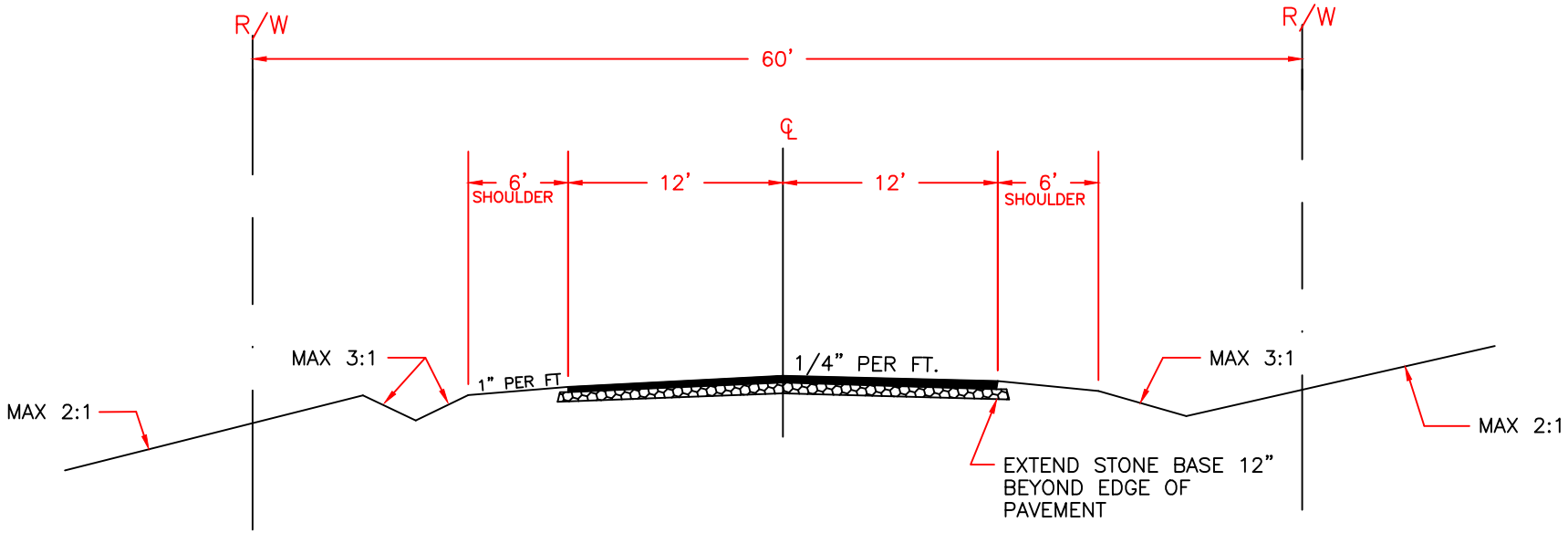

NOTES:
1) LOCAL STREET WITHOUT CURB & GUTTER SHALL BE IN 60' R/W.
2) GRADES SHALL NOT EXCEED 8%.
3) PAVEMENT DESIGN TO BE 8" – ABC, 2.5" – S9.5B

TOWN OF GARNER, N.C.

LOCAL STREET SECTION (NO CURB)

DRAWN BY: C. NIX

APPROVED BY: C. JOHNSON

REVISED 3/2019

STD. NO. 3.03

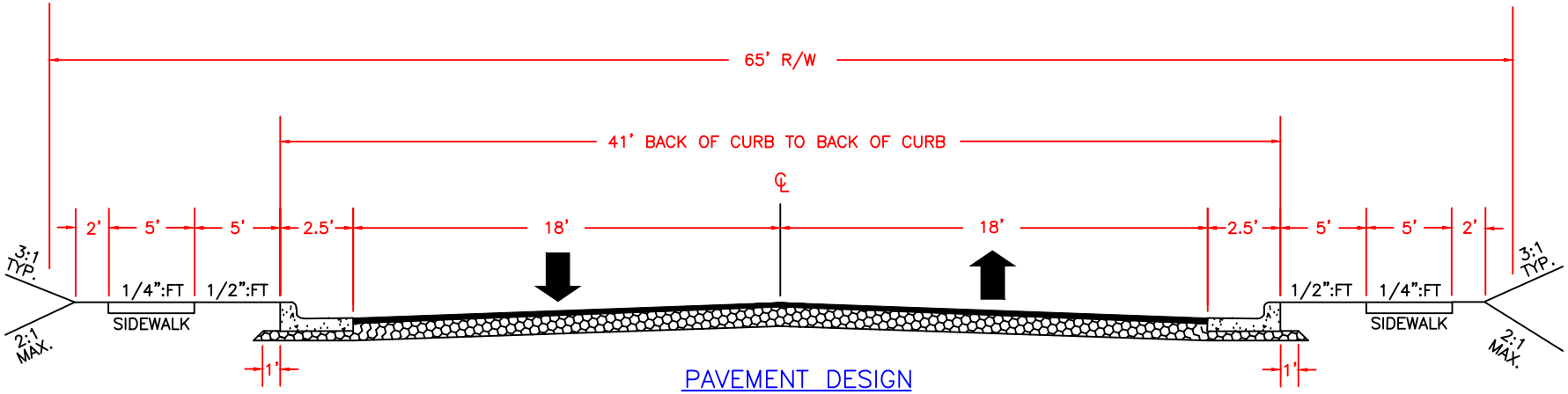

PAVEMENT DESIGN

INDUSTRIAL STREET 8" – ABC, 3" – I19.0C, 3" – S9.5B

INDUSTRIAL STREET SECTION

TOWN OF GARNER, N.C.

DRAWN BY: C. NIX

APPROVED BY: C. JOHNSON

REVISED 3/2019

STD. NO. 3.04

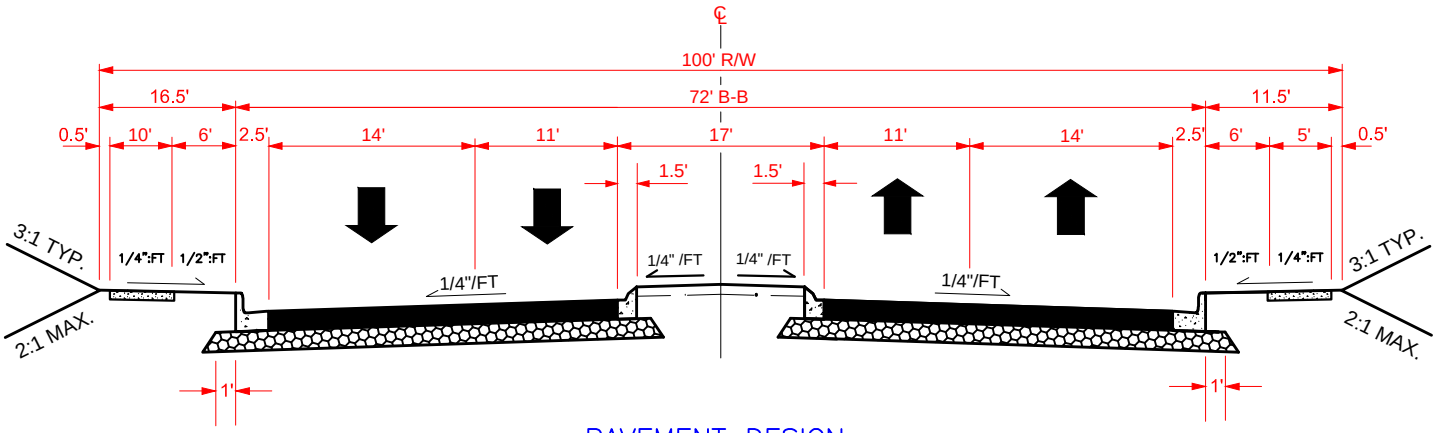

PAVEMENT DESIGN

THOROUGHFARE STREET 10" – ABC, 4" – I19.0C, 3" – S9.5B

TOWN OF GARNER, N.C.

THOROUGHFARE STREET SECTION

DRAWN BY: C. NIX

APPROVED BY: C. JOHNSON

REVISED 3/2019

STD. NO. 3.05

PUBLIC

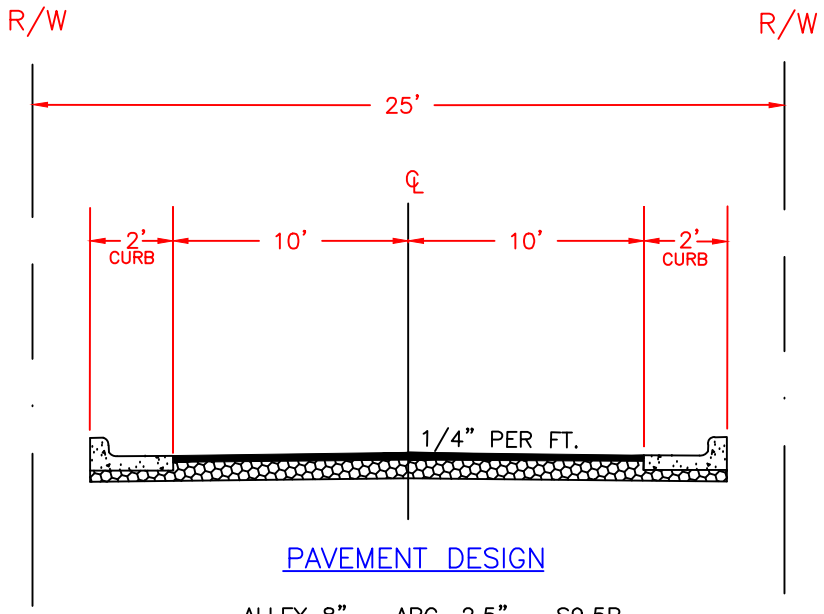

PAVEMENT DESIGN

ALLEY 8" – ABC, 2.5" – S9.5B

PRIVATE

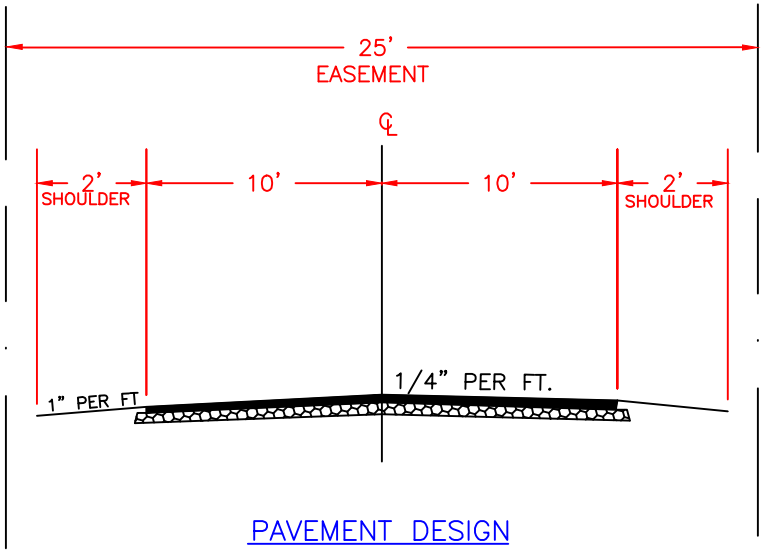

PAVEMENT DESIGN

ALLEY 8" – ABC, 2" – S9.5B

TOWN OF GARNER, N.C.

ALLEY CROSS SECTION

DRAWN BY: C. NIX

APPROVED BY: C. JOHNSON

REVISED 3/2019

STD. NO. 3.06

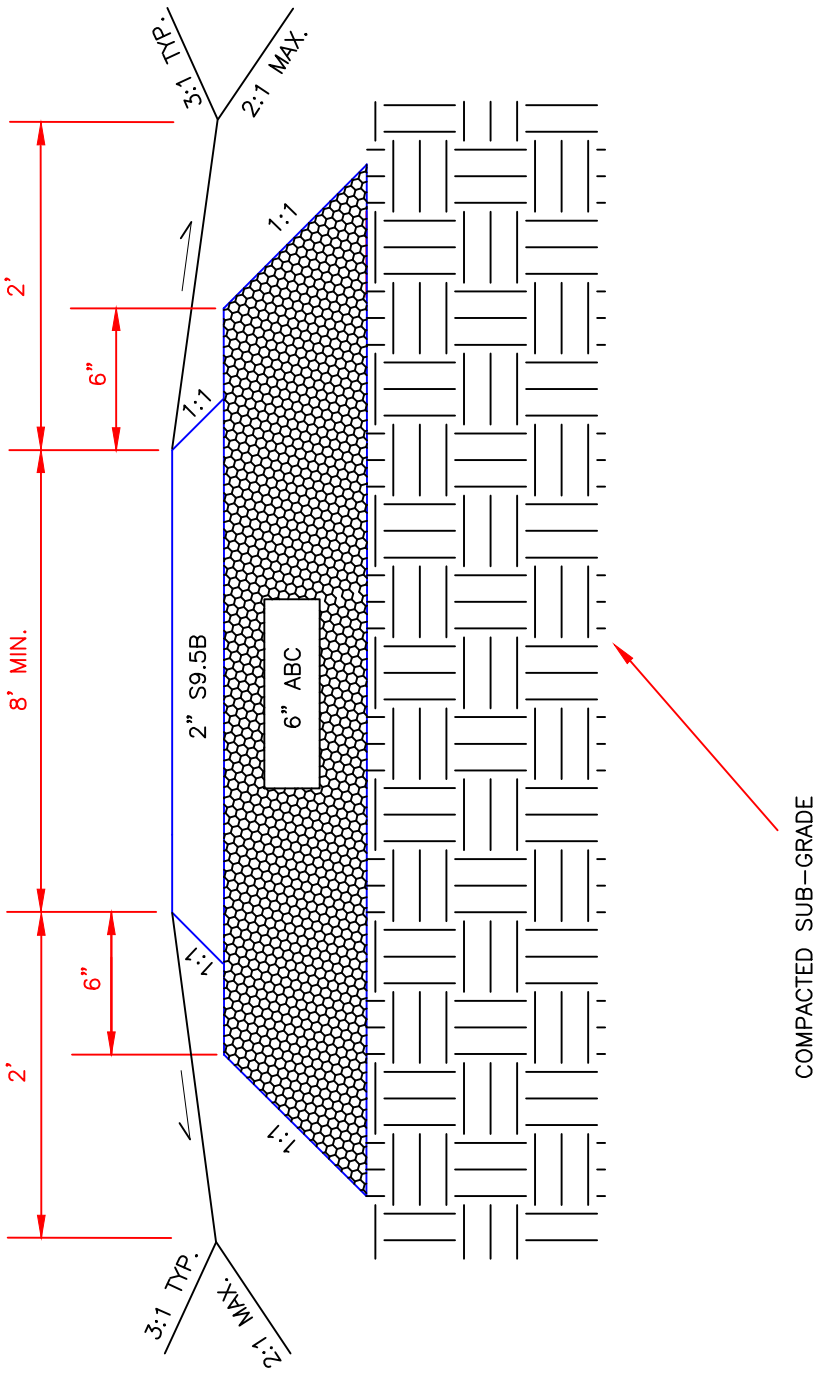

ASPHALT MULTI-PURPOSE PATH	DRAWN BY: C. NIX	REVISED 3/2019
TOWN OF GARNER, N.C.	APPROVED BY: C. JOHNSON	STD. NO. 3.07

NOTE: ALL VERTICAL ASPHALT SURFACES SHALL BE TACK COATED.

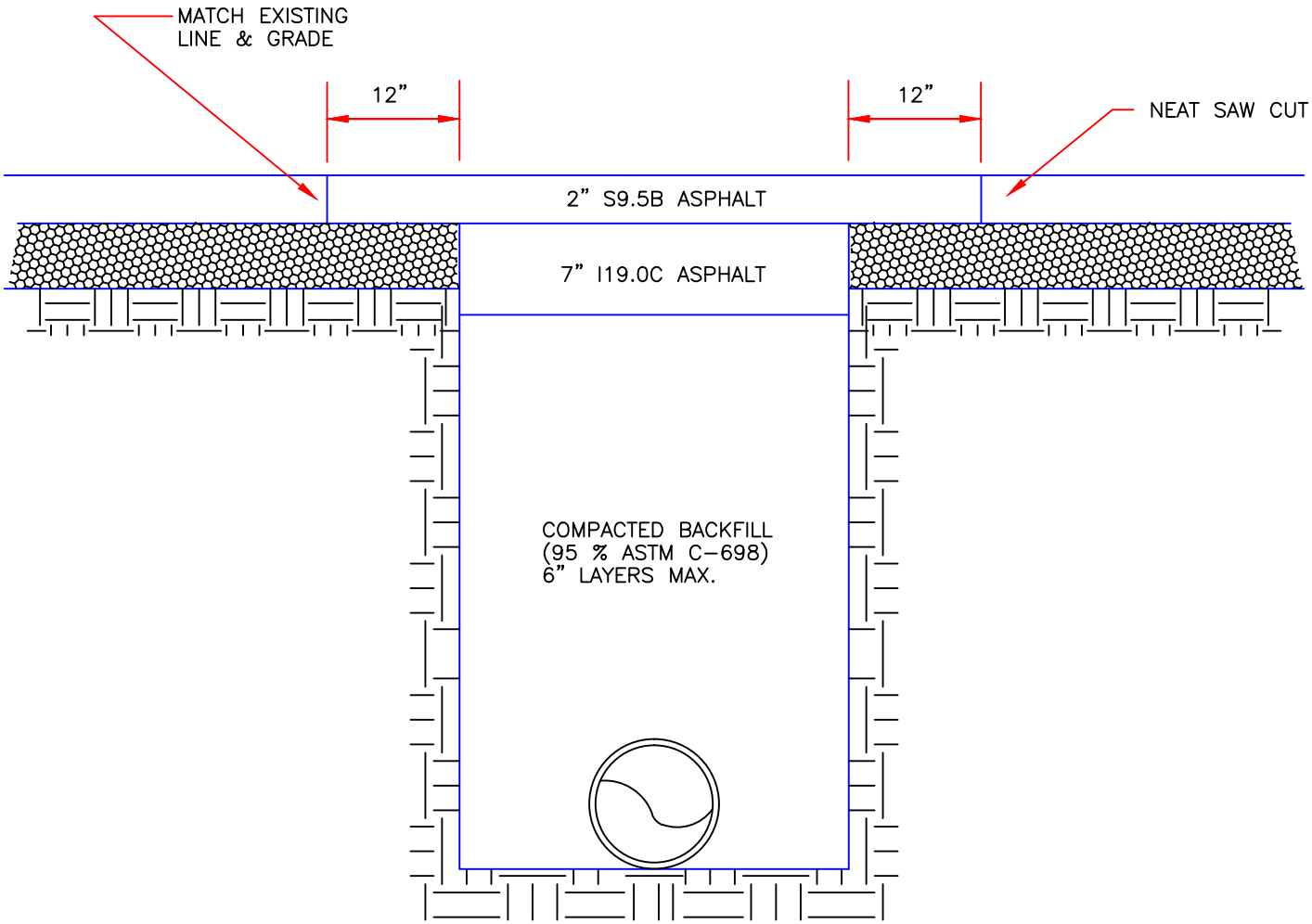

UTILITY TRENCH PAVEMENT REPAIR

TOWN OF GARNER, N.C.

DRAWN BY: C. NIX

APPROVED BY: C. JOHNSON

REVISED 3/2019

STD. NO. 3.08

NOTE: ALL VERTICAL ASPHALT SURFACES SHALL BE TACK COATED.

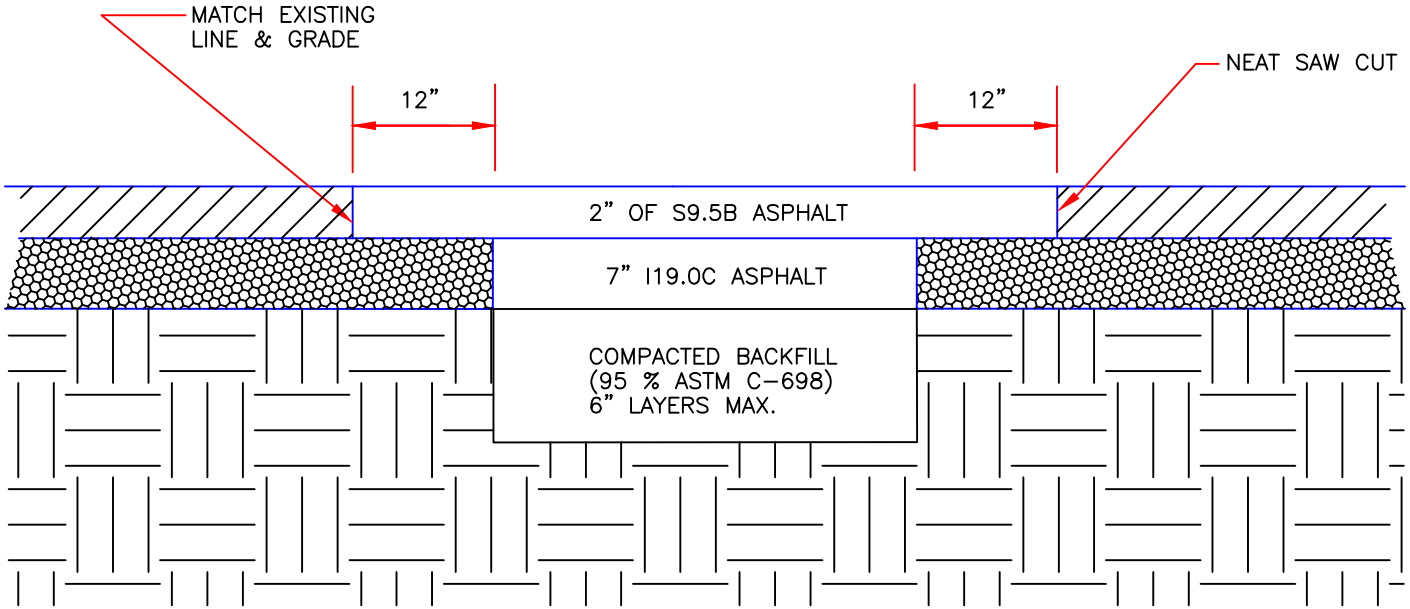

TYPICAL PAVEMENT REPAIR

TOWN OF GARNER, N.C.

DRAWN BY: C. NIX

APPROVED BY: C. JOHNSON

REVISED 3/2019

STD. NO. 3.09

TOWN OF GARNER, N.C.

STANDARD DRIVEWAY TURNOUT

NOTES:

1) RESIDENTIAL DRIVEWAY TO BE MAXIMUM 12' IN WIDTH UNLESS A VARIANCE IS GRANTED BY THE TOWN ENGINEER
2) COMMERCIAL AND INDUSTRIAL DRIVEWAYS TO BE A MAXIMUM OF 30' IN WIDTH
3) IF DISTANCE BETWEEN DRIVEWAY CUT & EXISTING CURB JOINT IS LESS THAN 5' REMOVE CURB TO EXISTING JOINT & REPLACE WITH MONOLITHIC POUR. IF DISTANCE IS GREATER THAN 5', THE EXISTING GUTTER SHALL BE SAWCUT.

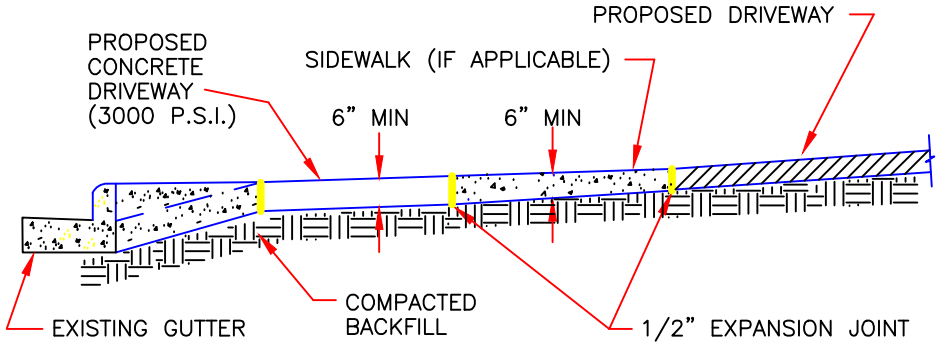

TYPICAL SECTION

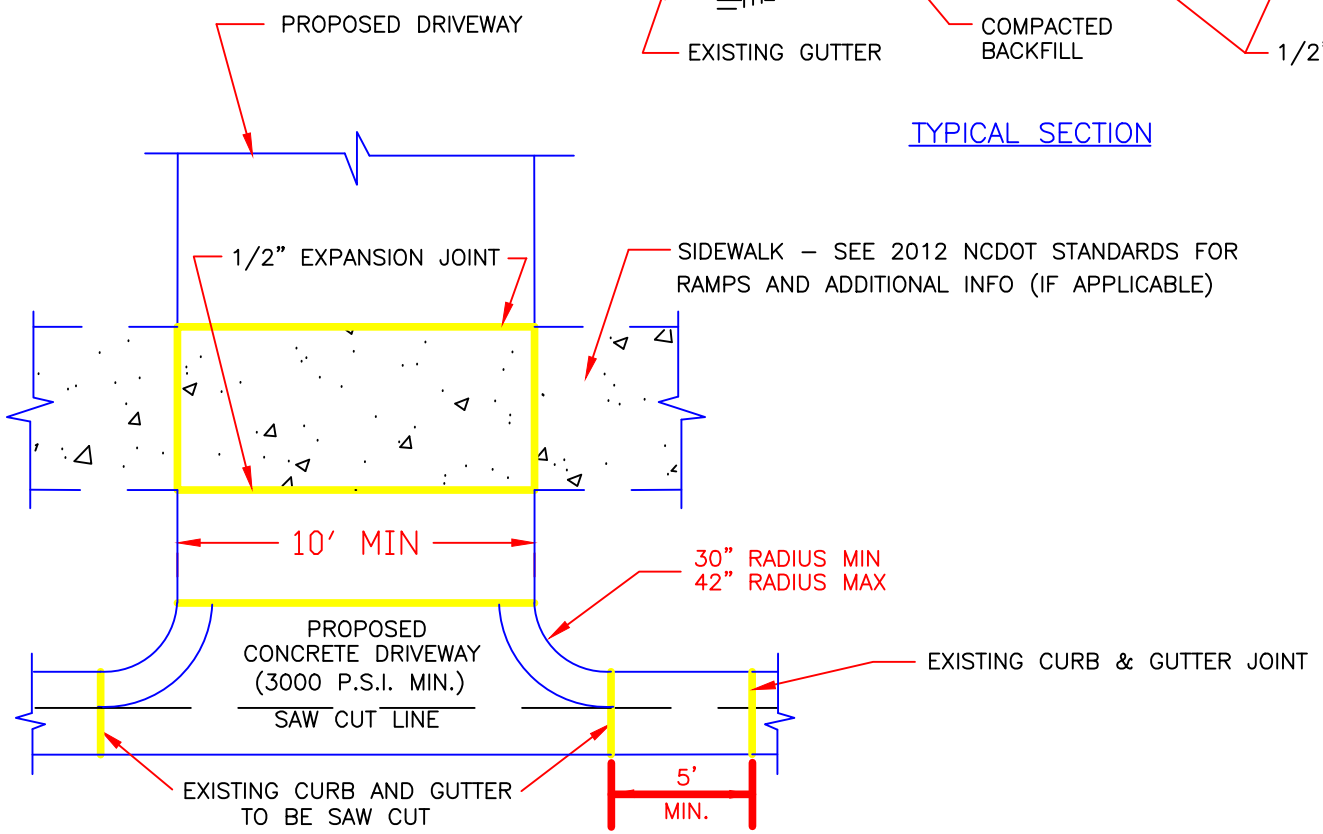

PLAN VIEW

DRAWN BY:	REVISED
APPROVED BY:	STD. NO. 3.12

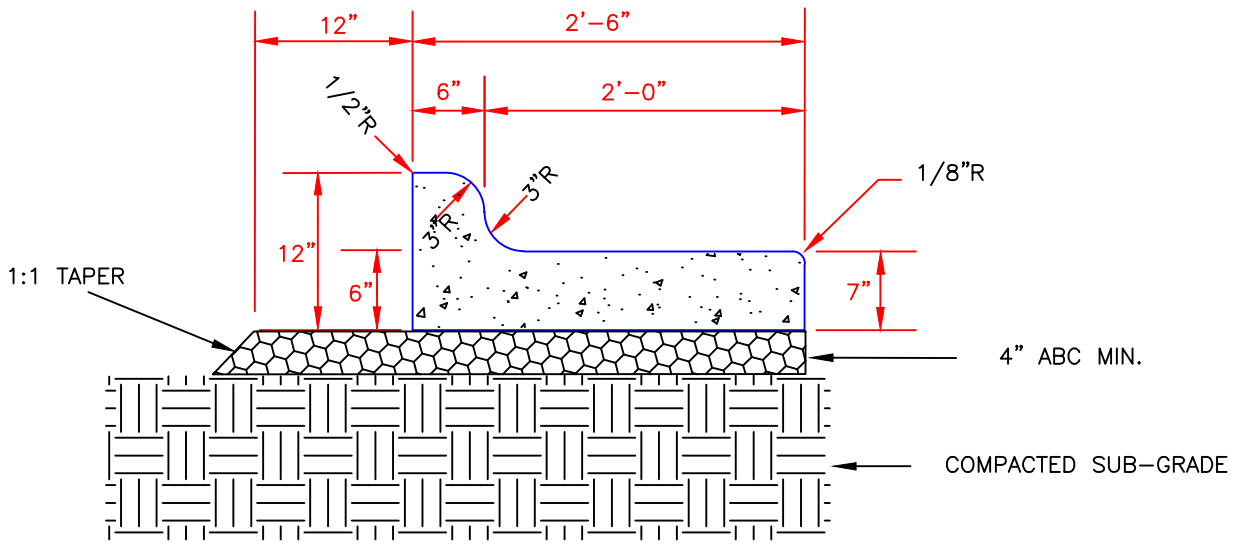

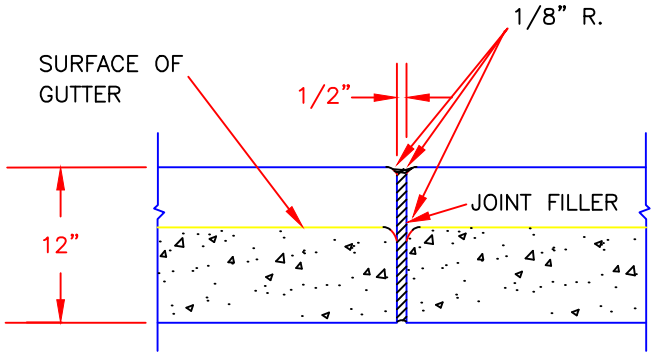

TRANSVERSE EXPANSION
JOINT IN CURB & GUTTER

NOTES:

1) CONTRACTION JOINTS SHALL BE SPACED AT 10' INTERVALS, EXCEPT THAT A 15' SPACING MAY BE USED WHEN A MACHINE IS USED OR WHEN SATISFACTORY SUPPORT FOR THE FACE FORM CAN BE OBTAINED WITHOUT THE USE OF TEMPLATES AT 10' INTERVALS. JOINT SPACING MAY BE ALTERED BY THE TOWN ENGINEER TO PREVENT UNCONTROLLED CRACKING.

2) CONTRACTION JOINTS SHALL BE INSTALLED BY THE USE OF TEMPLATES OR FORMED BY OTHER APPROVED METHODS. WHERE SUCH JOINTS ARE NOT FORMED BY TEMPLATES, A MINIMUM DEPTH OF 1.5" SHALL BE OBTAINED.

3) ALL CONTRACTION JOINTS SHALL BE FILLED WITH JOINT SEALER. EXPANSION JOINTS SHALL BE SPACED AT 90' INTERVALS AND ADJACENT TO ALL RIGID OBJECTS.

4) WHEN REPAIRING CRACKED OR DAMAGED CURB AND GUTTER, THE MINIMUM LENGTH OF SECTIONS TO BE REMOVED AND REPLACED ARE 10' FOR FORMED CURB AND 7.5' FOR MACHINE PLACED CURB. NO SAW-CUT REPAIR OF CRACKS ALLOWED.

5) MINIMUM CONCRETE STRENGTH SHALL BE 3000 PSI.

STANDARD CURB & GUTTER	DRAWN BY: C. NIX	REVISED 3/2019
TOWN OF GARNER, N.C.	APPROVED BY: C. JOHNSON	STD. NO. 3.13

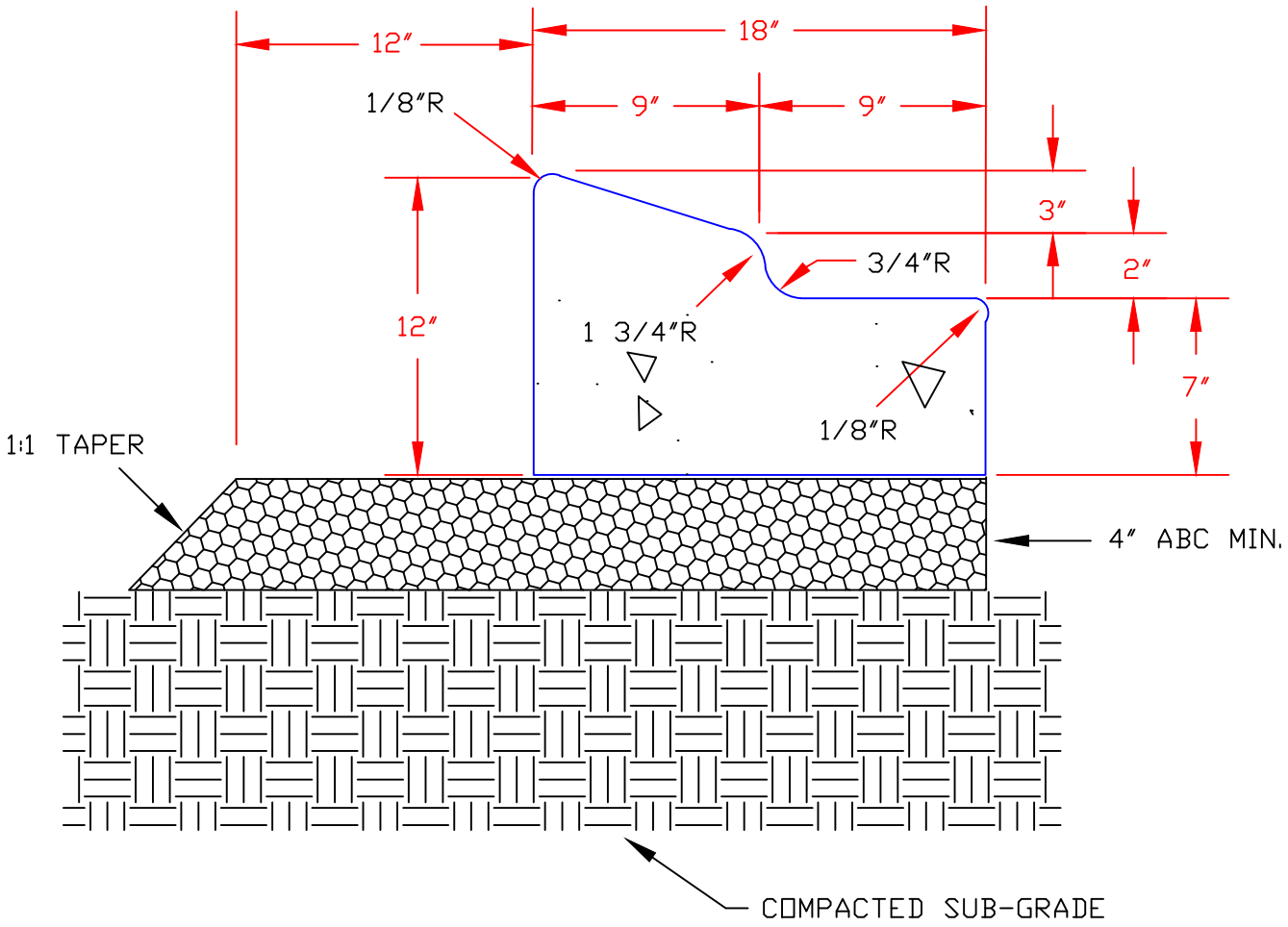

NOTES:

CONTRACTION JOINTS SHALL BE SPACED AT 10′ INTERVALS, EXCEPT THAT A 15′ SPACING MAY BE USED WHEN A MACHINE IS USED OR WHEN SATISFACTORY SUPPORT FOR THE FACE FORM CAN BE OBTAINED WITHOUT THE USE OF TEMPLATES AT 10′ INTERVALS. JOINT SPACING MAY BE ALTERED BY THE ENGINEER TO PREVENT UNCONTROLLED CRACKING.

CONTRACTION JOINTS MAY BE INSTALLED BY THE USE OF TEMPLATES OR FORMED BY OTHER APPROVED METHODS. WHERE SUCH JOINTS ARE NOT FORMED BY TEMPLATES, A MINIMUM DEPTH OF 1.5″ SHALL BE OBTAINED.

ALL CONTRACTION JOINTS SHALL BE FILLED WITH JOINT SEALER. EXPANSION JOINTS SHALL BE SPACED AT 90′ INTERVALS AND ADJACENT TO ALL RIGID OBJECTS.

MINIMUM CONCRETE STRENGTH SHALL BE 3000 PSI.

MEDIAN CURB	DRAWN BY: C. NIX	REVISED 3/2019
TOWN OF GARNER, N.C.	APPROVED BY: C. JOHNSON	STD. NO. 3.14

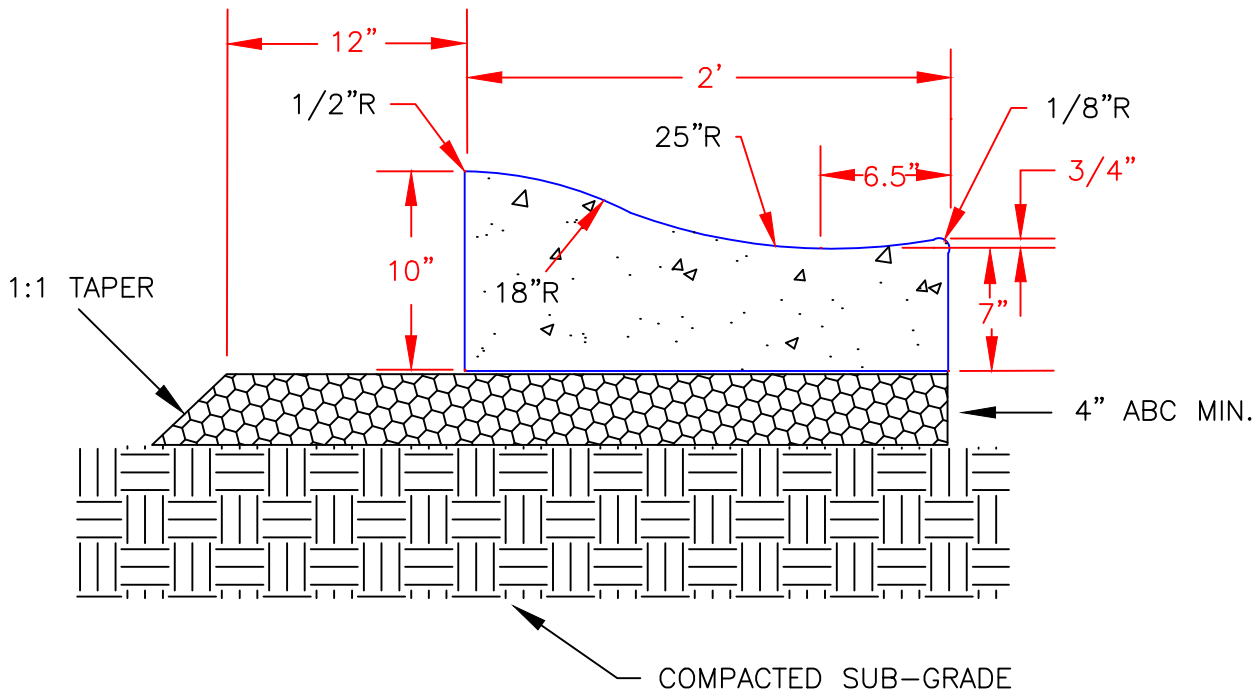

NOTES:

1. ROLLED CURB IS INTENDED FOR USE IN PRIVATE STREETS AND/OR PUBLIC STREETS WITHIN SENIOR LIVING DEVELOPMENTS.

2. CONTRACTION JOINTS SHALL BE SPACED AT 10' INTERVALS, EXCEPT THAT A 15' SPACING MAY BE USED WHEN A MACHINE IS USED OR WHEN SATISFACTORY SUPPORT FOR THE FACE FORM CAN BE OBTAINED WITHOUT THE USE OF TEMPLATES AT 10' INTERVALS. JOINT SPACING MAY BE ALTERED BY THE TOWN ENGINEER TO PREVENT UNCONTROLLED CRACKING.

3. CONTRACTION JOINTS MAY BE INSTALLED BY THE USE OF TEMPLATES OR FORMED BY OTHER APPROVED METHODS. WHERE SUCH JOINTS ARE NOT FORMED BY TEMPLATES, A MINIMUM DEPTH OF 1.5" SHALL BE OBTAINED.

4. ALL CONTRACTION JOINTS SHALL BE FILLED WITH JOINT SEALER. EXPANSION JOINTS SHALL BE SPACED AT 90' INTERVALS AND ADJACENT TO ALL RIGID OBJECTS.

5. TRANSITION FROM 24" WIDTH ROLL CURB TO 30" STANDARD CURB AT CATCH BASINS A MINIMUM OF 5' EITHER SIDE OF CATCH BASIN. PROVIDE EXPANSION JOINT AT TRANSITION POINT. THE TRANSITION SHALL MAINTAIN THE EDGE OF THE ASPHALT WITH THE CURB AND GUTTER, WITH THE 6" SHIFT MOVING AWAY FROM THE PAVEMENT TOWARDS THE BACK OF CURB.

6. MINIMUM CONCRETE STRENGTH SHALL BE 3000 PSI.

ROLLED CURB	DRAWN BY: C. NIX	REVISED 3/2019
TOWN OF GARNER, N.C.	APPROVED BY: C. JOHNSON	STD. NO. 3.15

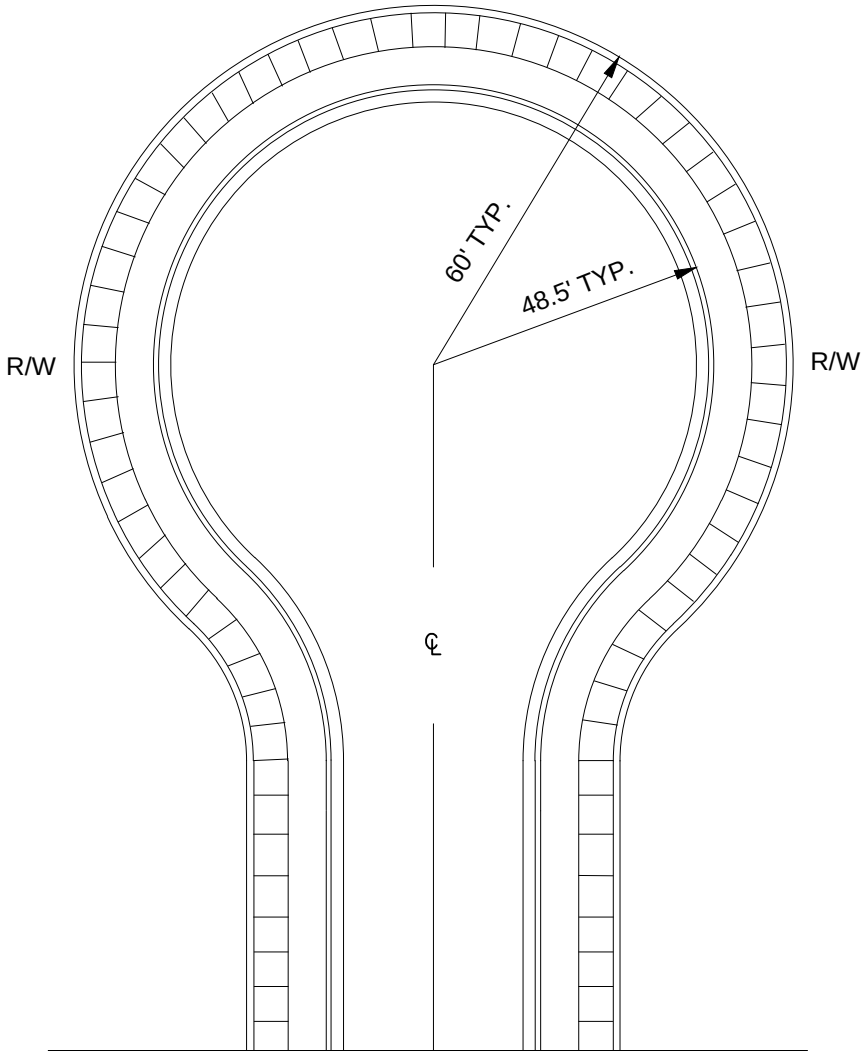

NOTE: A 30' RADIUS MAY BE USED ON CUL-DE-SAC STREETS LESS THAN 150' IN LENGTH

RESIDENTIAL CUL-DE-SAC	DRAWN BY: C. NIX	REVISED 4/2019
TOWN OF GARNER, N.C.	APPROVED BY: C. JOHNSON	STD. NO. 3.16

MAJOR STREET

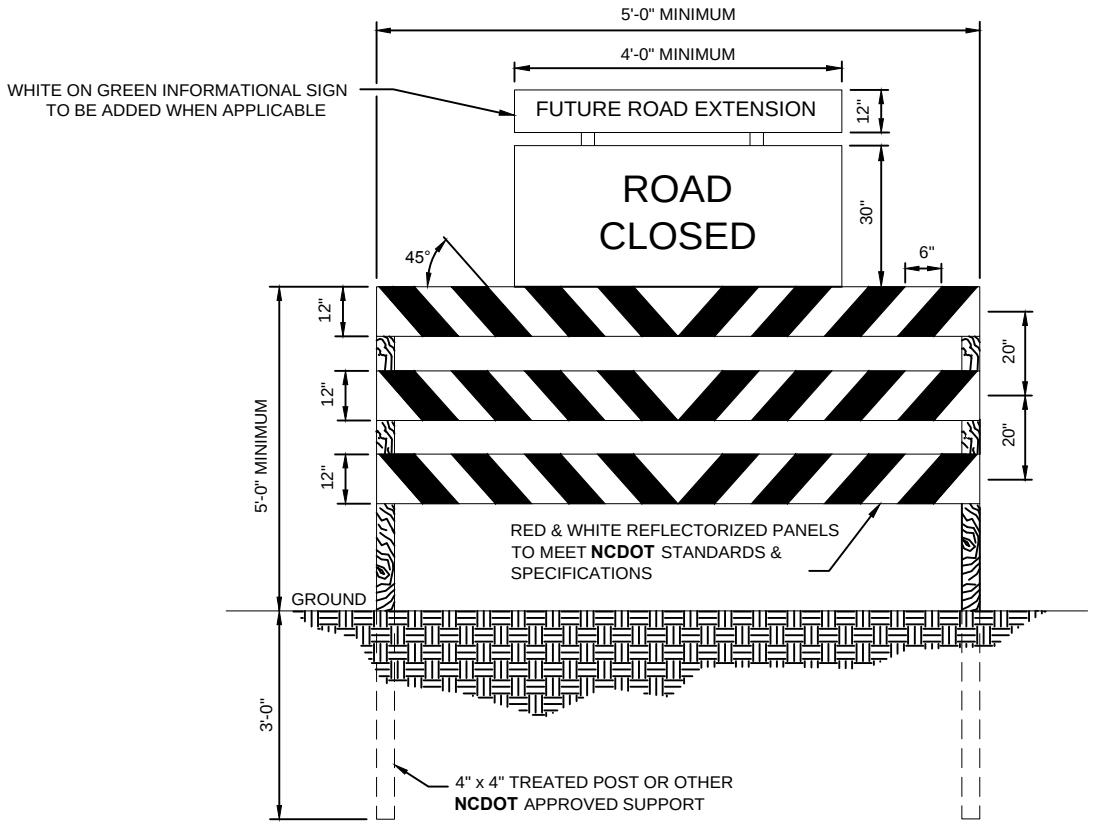

FOR USE AT FOUR LANE STREET AND ≥ 40 MPH, OTHERWISE THREE RED OBJECT MARKERS.

LOCAL & MIXED USE

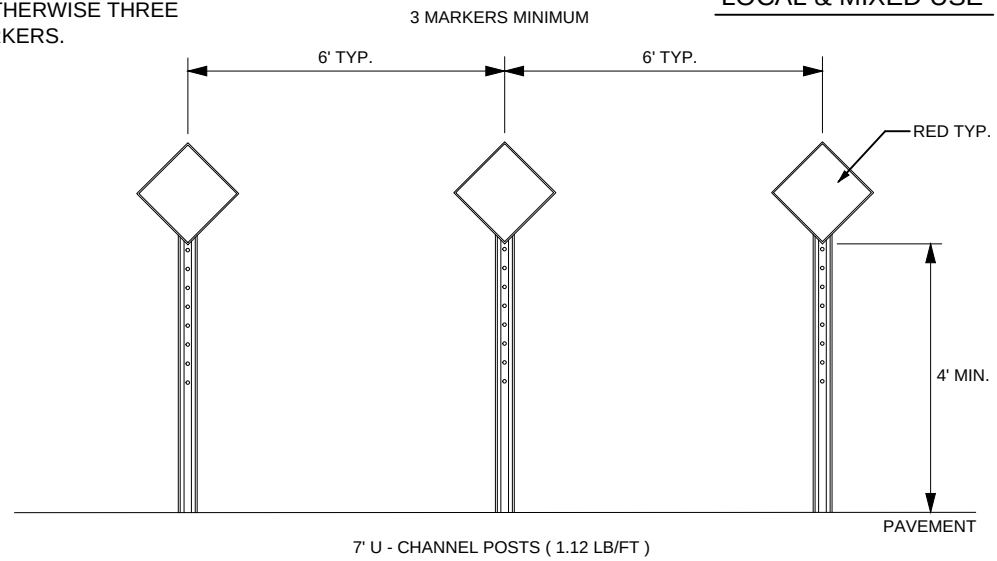

NOTES:

1. BARRICADE(S) TO BE ERECTED ACROSS ENTIRE ROADWAY INCLUDING CURB & GUTTER.
2. ADVANCE WARNING SIGN W14-1 (DEAD END) SHALL BE PLACED JUST AFTER LAST INTERSECTING STREET.
3. MARKINGS FOR BARRICADE RAILS SHALL BE REFLECTIVE AND ALTERNATE RED & WHITE STRIPS.
4. "ROAD CLOSED" SIGN SHALL MEET SPECIFICATIONS OF M.U.T.C.D. R11-2 AND BE REQUIRED ATOP EACH BARRICADE USED.
5. CALL 811 FOR UNDERGROUND UTILITY LOCATE PRIOR TO INSTALLATION.

BARRICADE FOR DEAD END STREETS	DRAWN BY: C. NIX	REVISED 4/2019
TOWN OF GARNER, N.C.	APPROVED BY: C. JOHNSON	STD. NO. 3.17

TOWN OF GARNER, N.C.

STANDARD CONCRETE DROP INLET

NO.	DATE	DESCRIPTION

REVISIONS

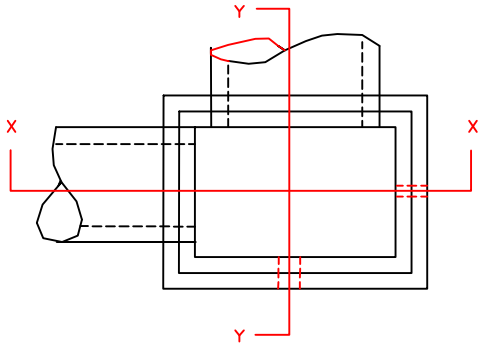

PLAN

WITH GRATE & FRAME REMOVED

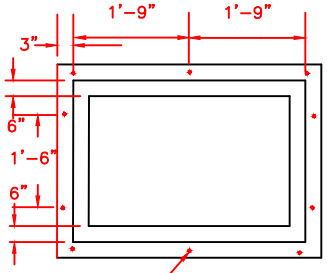

PLAN

SHOWING POSITION OF BOLTS

NOTES:

CLASS "B" CONCRETE TO BE USED THROUGHOUT.

OPTIONAL CONSTRUCTION-MONOLITHIC POUR, 2" KEYWAY, OR 4 BAR DOWELS AT 12" CENTER AS DIRECTED BY ENGINEER

TWO 2" PIPE WEEP HOLES TO BE PLACED AS DIRECTED BY ENGINEER

FORMS ARE TO BE USED FOR CONSTRUCTIN OF THE BOTTOM SLAB

A STONE DRAIN CONSISTING OF 1 CUBIC FOOT OF NO. 78M STONE CONTAINED IN A BAG OF POROUS FABRIC SHALL BE PLACED AT EACH WEEP HOLE.

ALL DROP INLETS OVER 3"-6" IN DEPTH TO BE PROVIDED WITH STEPS 1'-2" ON CENTER STEPS SHALL BE IN ACCORDANCE WITH STD. 1.02

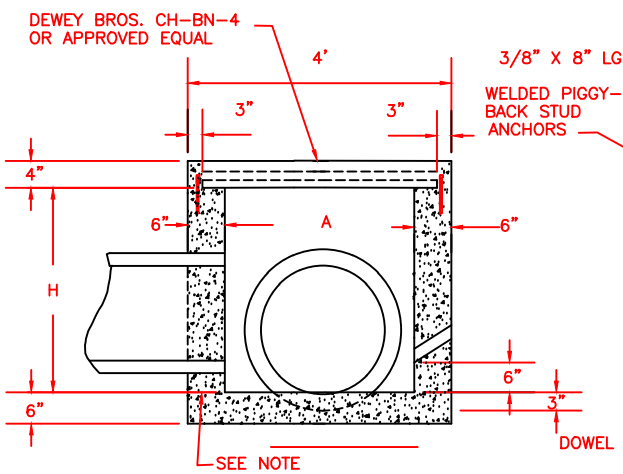

SECTION-XX

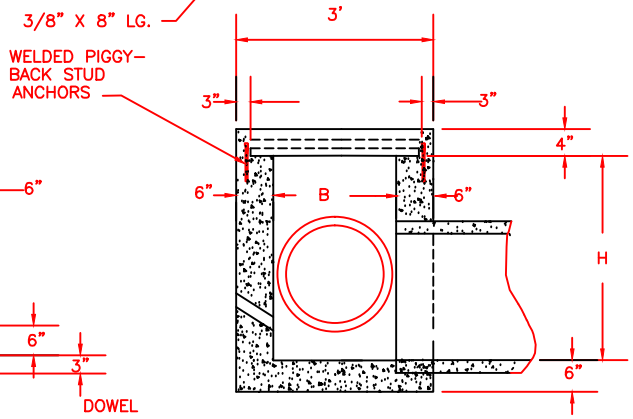

SECTION -YY

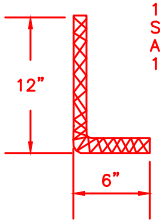

DOWEL

DIMENSIONS AND QUANTITIES FOR DORP INLET

PIPE	SPAN	WIDTH	HEIGHT	CUBIC YARDS IN BOX		TOTAL QUANTITIES BOX & COVER	DEDUCTIONS FOR ONE PIPE	
D	A	B	H	FLOOR & COPING	WALL/ FEET H	CUBIC YARDS MIN. H	C.M.	R.C
12"	3'	2'	2'-8"	0.262	0.222	0.855	0.015	0.024
15"			3'-8"			0.929	0.023	0.036
18"			3'-5"			1.021	0.033	0.049
24"			4'-0"			1.151	0.059	0.085
30"	3'	2'	4'-3"	0.262	0.222	1.207	0.092	0.127

DIMENSIONS FOR CHANNELS

CHANNELS

NO.	SIZE	LENGTH	TOTAL LIN FEET
2	3"X4.1"	4'-0"	8'-0"
2	3"X4.1"	2'-6"	5'-0"

DRAWN BY:

DESIGNED BY:

DATE APPROVED:

APPROVED BY:

REV. NO.

STD. NO. 4.10

TOWN OF GARNER, N.C.

STANDARD BRICK DROP INLET

NO.	DATE	DESCRIPTION

REVISIONS

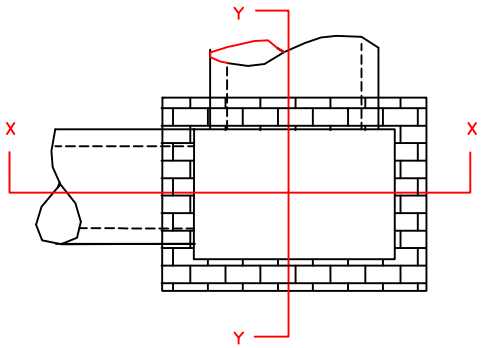

PLAN
WITH COPING REMOVED

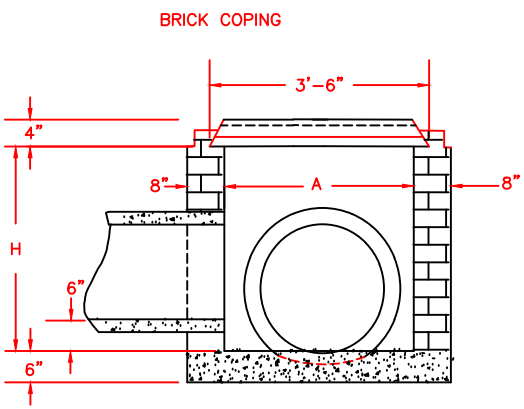

SECTION-XX

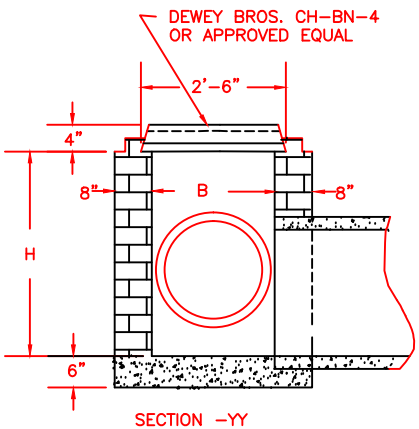

SECTION -YY

NOTES:

ALL DROP INLET OVER 3'-6" IN DEPTH TO BE PROVIDED WITH STEPS 1'-2" ON CENTERS. STEPS SHALL BE IN ACCORDANCE WITH STD. NO. 1.02

CLASS "B" CONCRETE TO BE USED.

ALL MORTAR JOINTS ARE TO BE 1/2" +- 1/8"

FORMS ARE TO BE USED FOR THE CONSTRUCTION OF THE BOTTOM SLAB

BRICK MASONRY DORP INLET NOT TO BE USED IN LOCATIONS SUBJECT TO TRAFFIC.

JUMBO BRICK WILL BE PERMITTED. CONCRETE BRICK OR 4 SOLID CONCRETE BLOCKS MAY BE USED IN LIEU OF CLAY BRICK.

FOR 8'-0" IN HEIGHT OR LESS USE 8" WALL. OVER 8'-0" IN HEIGHT, USE 12" WALL TO 6'-0" FROM TOP OF WALL. AND 8" WALL FOR THE REMAINING 6'-0". QUANTITIES TO BE ADJUSTED ACCORDINGLY.

DIMENSIONS AND QUANTITIES

DIMENSIONS OF BOX & PIPE				CONCRETE IN BASE	TOTAL BRICK MASONRY			DEDUCTINS FOR ONE PIPE	
PIPE D	SPAN A	WIDTH B	HEIGHT H(MIN)	CU. YDS.	PER FT. HEIGHT	BRICK COPING	MIN. H	C.M.	R.C
12"	3'-0"	2'-0"	2'-8"	0.267	0.313	0.037	0.871	0.020	0.032
15"			3'-0"				0.976	0.031	0.047
18"			3'-5"				1.106	0.044	0.065
24"			4'-0"				1.289	0.078	0.113
30"	3'-0"	2'-0"	4'-3"	0.267	0.313	0.037	1.367	0.122	0.170

DRAWN BY:
DESIGNED BY:
DATE APPROVED:
APPROVED BY:
REV. NO.
STD. NO. 4.11

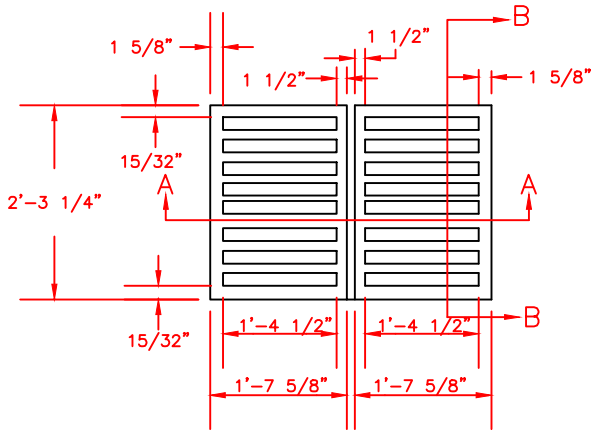

PLAN OF GRATING

DEWEY BROS. CH-BN-4 OR APPROVED EQUAL

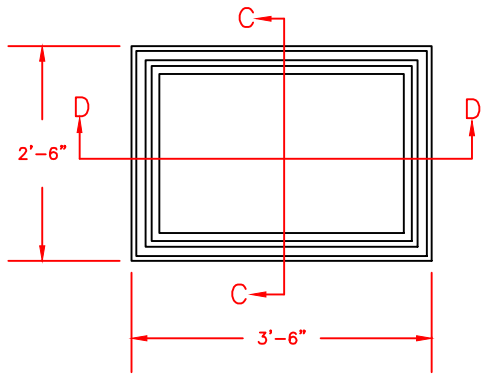

PLAN OF FRAME

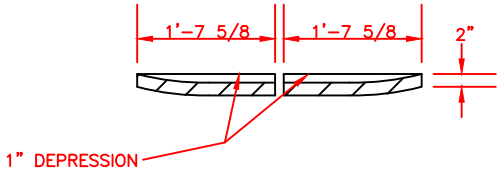

SECTION-AA

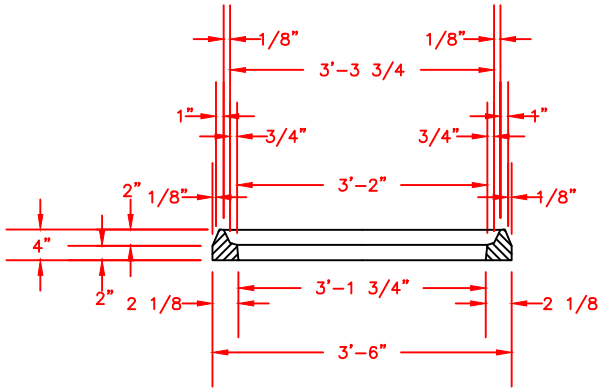

SECTION-DD

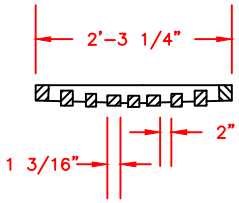

SECTION-BB

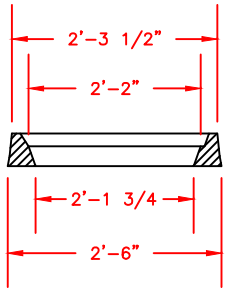

SECTION-CC

NO.	DATE	REVISIONS DESCRIPTION

TOWN OF GARNER, N.C.

STANDARD DROP INLET GRATES

DRAWN BY:

DESIGNED BY:

DATE APPROVED:

APPROVED BY:

REV. NO.

STD. NO. 4.12

TOWN OF GARNER, N.C.

STANDARD CONCRETE CATCH BASIN

NO.	DATE	DESCRIPTION

REVISIONS

NOTES:

CLASS "B" CONCRETE TO BE THROUGHOUT.

ALL CATCH BASIN OVER 3'-6" IN DEPTH TO BE PROVIDED ACCORDANCE WITH STD. NO. 1.02

OPTIONAL CONSTRUCTION-MONOLITHIC POUR. 2" KEYWAY OR 4 BAR DOWELS AT 12 CENTERS AS DIRECTED BY ENGINEERS.

FORM ARE TO BE USED FOR THE CONSTRUCTION OF THE BOTTOM SLAB

FOR 8' IN HEIGHT OR LESS USE 6" LESS USE 6" WALLS AND BOTTOM SLABS OVER 8' AND UP TO 16' IN HEIGHT USE 8' WALLS AND BOTTOM SLAB. QUANTITIES TO BE ADJUSTED ACCORDINGLY

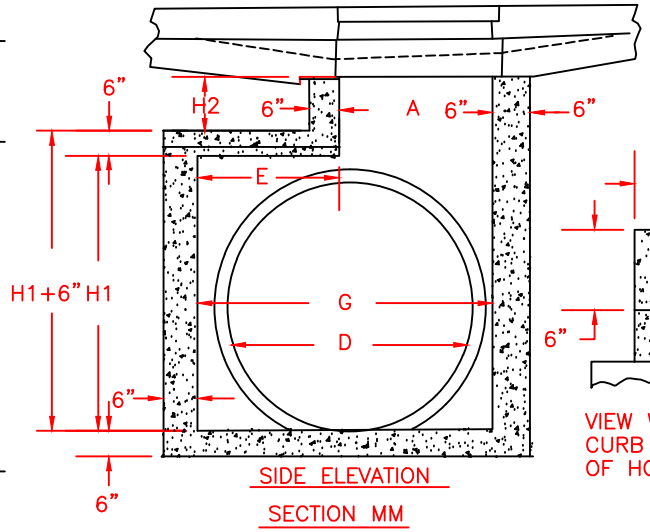

SIDE ELEVATION

SECTION MM

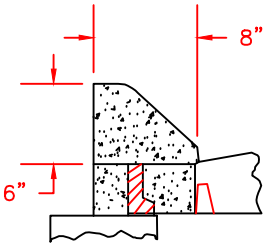

VIEW WHEN 8" X 6" CURB IS USED IN PLACED OF HOOD

STD. STEPS 102

DEWEY BROS. CH-BN-2000 OR APPROVED EQUAL

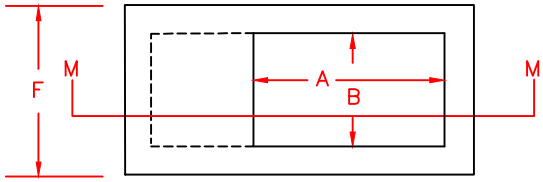

PLAN

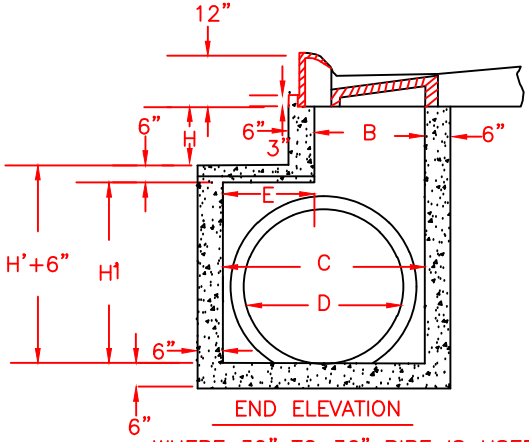

END ELEVATION

WHERE 30" TO 36" PIPE IS USED

SECTION JJ

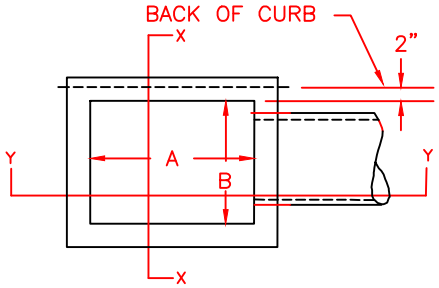

PLAN

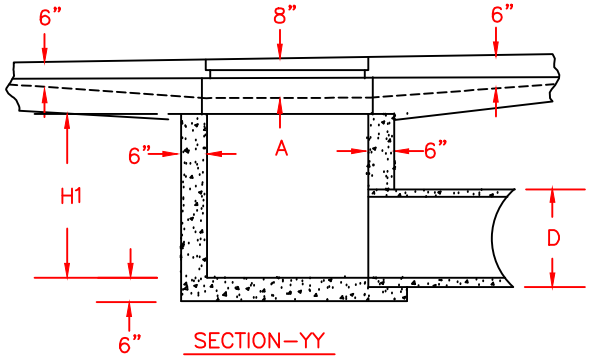

SECTION-YY

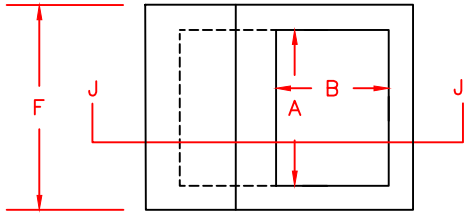

PLAN

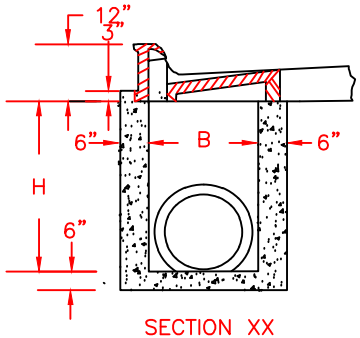

SECTION XX

DRAWN BY:

DESIGNED BY:

DATE APPROVED:

APPROVED BY:

REV. NO.

STD. NO. 4.13A

TOWN OF GARNER, N.C.

STANDARD CONCRETE CATCH BASIN

NO.	DATE	DESCRIPTION

REVISIONS

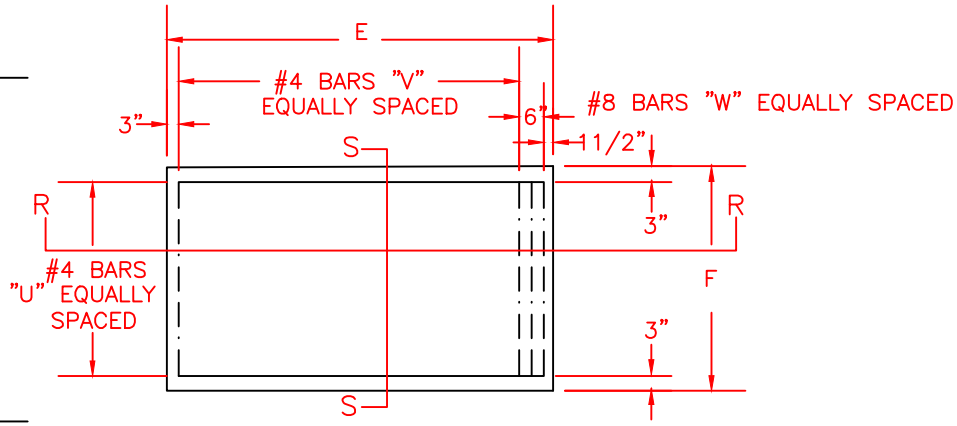

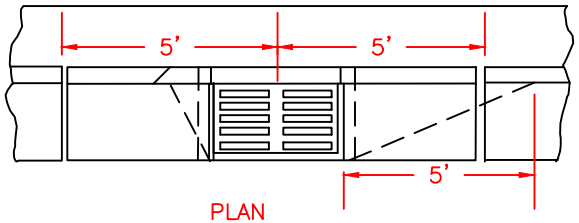

PLAN
CURB AND GUTTER
WITH CATCH BASIN ON STEEP GRADES

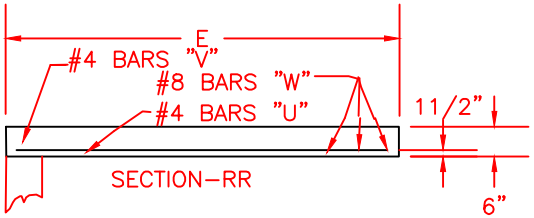

SECTION–RR

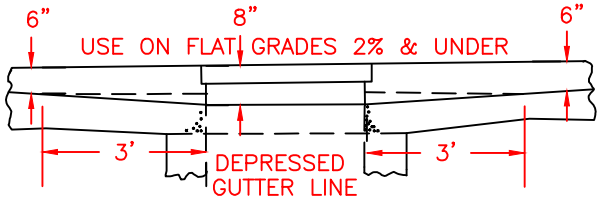

ELEVATION
NORMAL CURB & GUTTER ON LIGHT GRADES

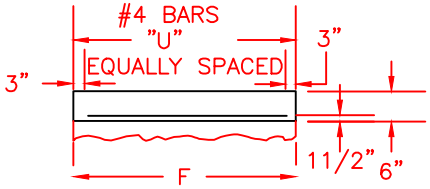

SECTION–SS

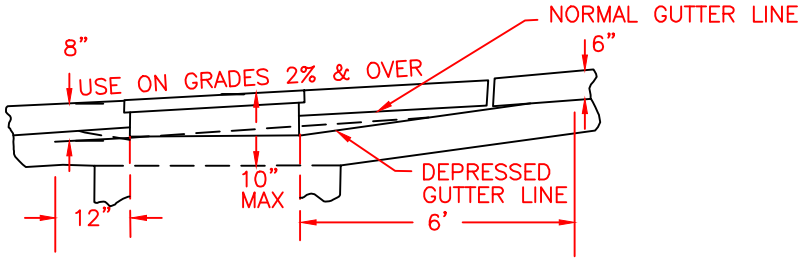

ELEVATION
NORMAL CURB & GUTTER ON STEEP GRADES

MIN. DIMENSIONS AND QUANTITIES FOR CONC. CATCH BASIN

PIPE	DIMENSIONS OF BOX & PIPE						COVER DIMENSION		REINFORCING BARS–U		BARS–V		BARS–W		CU.YDS. CONC. IN BOX						H1	ADD TO	DEDUCTIONS ONE PIPE	
	SPAN	WIDTH	WIDTH	SPAN	HEIGHT	HEIGHT									TOTAL	TOP	FLOOR	CONC IN	TOTAL	WALLS	C.Y./			
D	A	B	C	G	MIN. H1	H2	E	F	NO	LENGTH	NO	LENGTH	NO	LENGTH	LBS	SLAB		WALLS	CONC.	FT. HT.	FT. HT.	FT. HT.	C.M.	R.C.
12"	3'–0"	2'–2"	–	–	2'–3"	–	–	–	–	–	–	–	–	–	–	–	0.235	0.513	0.748		0.228	–	0.015	0.032
15"	3'–0"	2'–2"			2'–6"												0.235	0.583	0.818	0.228	0.228	–	0.023	0.036
18"					2'–10"												0.235	0.659	0.894	ABOVE	0.228	–	0.033	0.049
24"					3'–4"												0.235	0.774	1.009	MIN. H1	0.228	–	0.059	0.085
30"			3'–4"		3'–2"		1'–8"	4'–0"	4	1'–5"	2	3'–9"	3	3'–9"	39	0.123	0.321	0.950	1.394		2.271	0.077	0.092	0.127
36"			3'–10"		3'–8"	VARI–	2'–2"	4'–0"	4	1'–11"	3	3'–9"	3	3'–9"	43	0.161	0.358	1.154	1.673	0.228	0.290	0.077	0.132	0.178
42"				4'–5"	4'–4"	ABLE	1'–11"	3'–2:	4	1'–8"	2	2'–11"	3	2'–11"	32	0.112	0.318	1.315	1.745	H²	0.281	0.085	0.180	0.243
48"				5'–0"	4'–10"		2'–6"	3'–2"	4	2'–3"	3	2'–11"	3	2'–11"	35	0.145	0.352	1.560	2.057		0.302	0.085	0.235	0.317
54"	3'–0"	2'–2"		5'–7"	5'–4"		3'–1"	3'–2"	4	2'–10"	5	2'–11"	3	2'–11"	41	0.180	0.386	1.826	2.392		0.324	0.085	0.297	0.401

DRAWN BY:

DESIGNED BY:

DATE APPROVED:

APPROVED BY:

REV. NO.

STD. NO. 4.13B

TOWN OF GARNER, N.C.

STANDARD BRICK CATCH BASIN

NO.	DATE	DESCRIPTION

REVISIONS

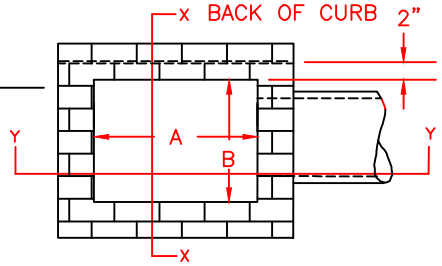

PLAN

DEWEY BROS. CH-BN-2000
OR APPROVED EQUAL

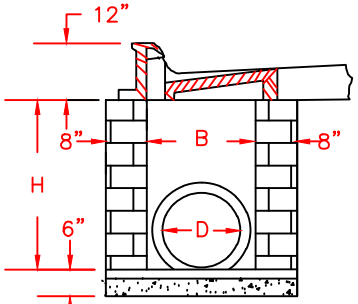

SECTION XX

NOTES:

ALL MORTAR JOINTS ARE TO BE 1/2"± 1/8" THICK CLASS "B" CONCRETE TO BE USED

FORMS ARE TO BE USED FOR THE CONSTRUCTION OF THE BOTTOM SLAB

DEDUCT FOR PIPE OR PIPES FROM TOTAL CU.YD. OF BRICK MASONRY

JUMBO BRICK WILL BE PREMITTED. CONCRETE BRICK OR 4" SOLID CONCRETE BLOCKS MAY BE USED IN LIEU OF CLAY BRICK.

ALL CATCH BASIN OVER 3'-6" IN DEPTH SHALL BE PROVIDED WITH STEPS 1'-2" ON CENTER. STEPS SHALL BE IN ACCORDANCE WITH STD. NO. 1.02

FOR OVER 8' IN HEIGHT, USE 12" WALL TO 6' FROM TOP OF WALL.

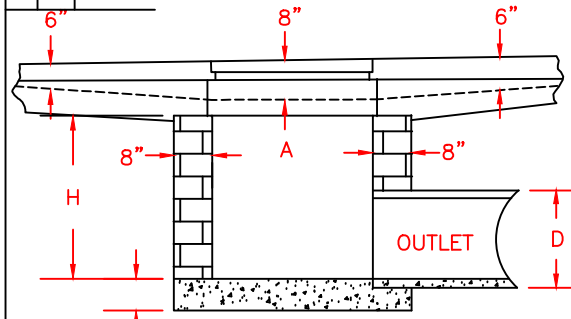

SECTION-YY

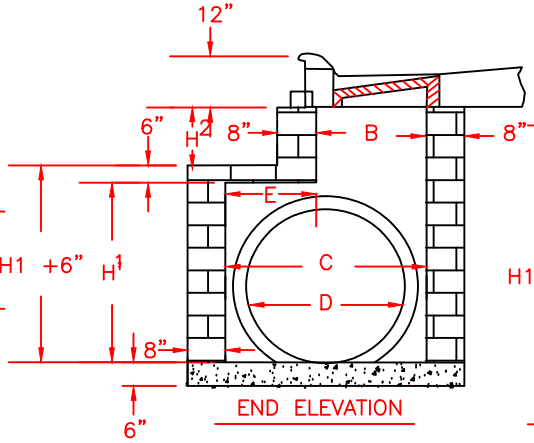

END ELEVATION

WHERE 30" TO 36" PIPE IS USED

SECTION JJ

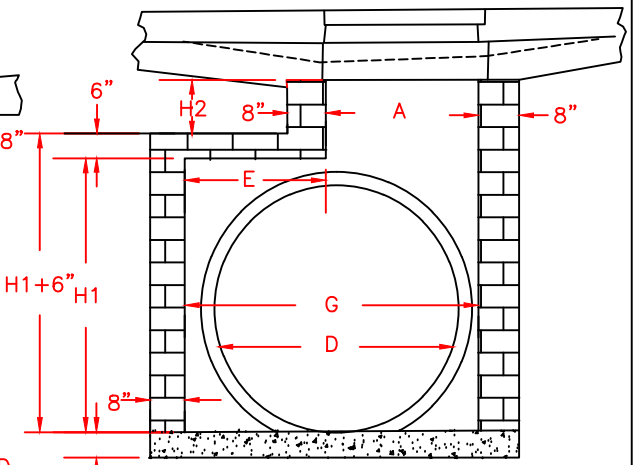

SIDE ELEVATION

WHERE 42" TO 54" PIPE IS USED

SECTION MM

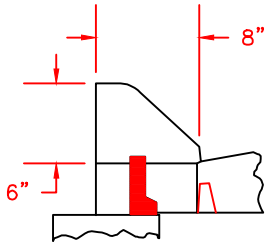

VIEW WHEN 8" X 6" CURB IS USED IN PLACED OF HOOD

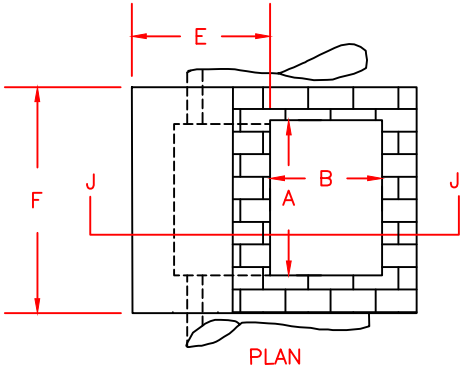

PLAN

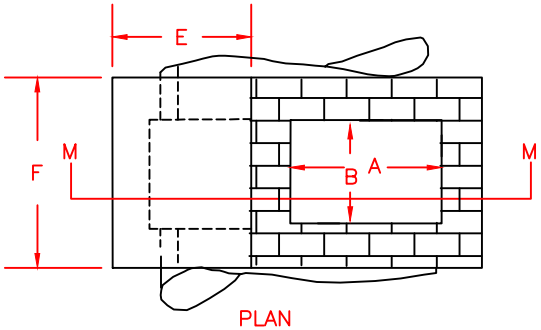

PLAN

DRAWN BY:	DESIGNED BY:
DATE APPROVED:	
APPROVED BY:	
STD. NO. 4.14A	REV. NO.

TOWN OF GARNER, N.C.

STANDARD BRICK CATCH BASIN

NO.	DATE	DESCRIPTION

REVISIONS

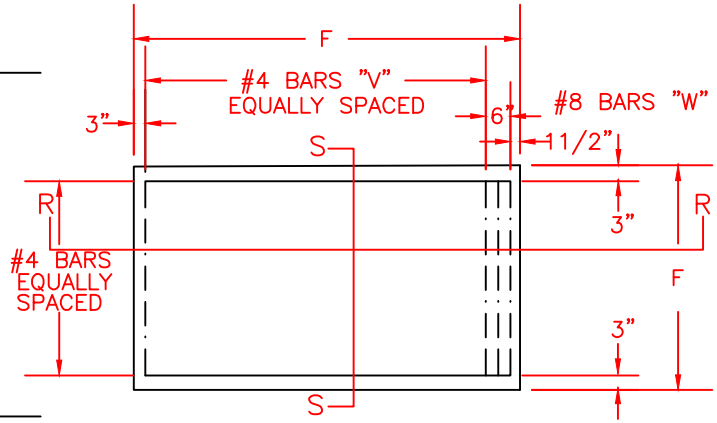

PLAN OF TOP SLAB

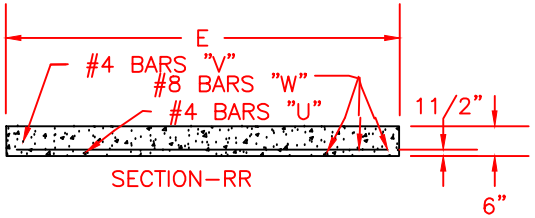

SECTION–RR

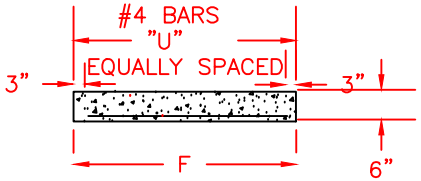

SECTION–SS

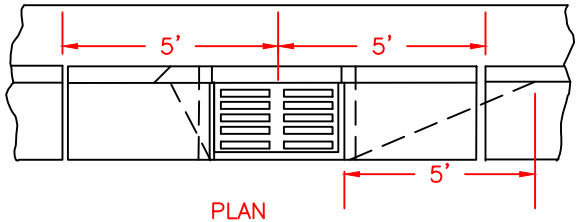

PLAN
CURB AND GUTTER
WITH CATCH BASIN ON STEEP GRADE

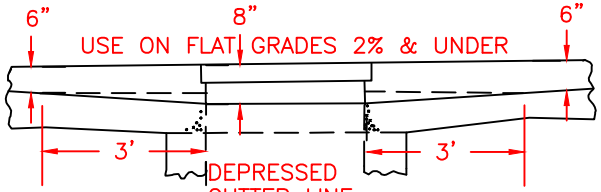

ELEVATION
NORMAL CURB & GUTTER ON LIGHT GRADES

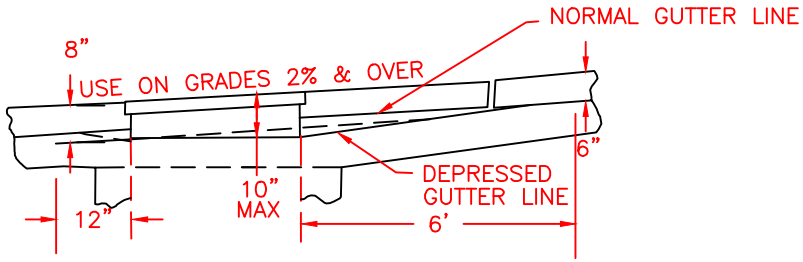

ELEVATION
NORMAL CURB & GUTTER ON STEEP GRADES

MIN.DIMENSIONS AND QUANTITIES FOR BRICK CATCH BASIN

DIMENSIONS OF BOX AND PIPE							COVER DIMENSION		REINFORCING BARS–U		BARS–V		BARS–W		TOTAL	CUBIC YARDS OF CONCRETE IN BOX			BRICK MASONRY H1		H1 C.Y/	ADD TO	DEDUCTIONS FOR ONE PIPE	
PIPE D	SPAN A	WIDTH B	WIDTH C	SPAN G	HEIGHT MIN. H	HEIGHT H^2	E	F1	NO	LENGTH	NO	LENGTH	NO	LENGTH H	LBS.	TOP SLAB	FLOOR	TOTAL	CU.YDS	PER FT HT	FT HT	FT HT	C.M.	R.C.
12"	3'–0"	2'–2"	–	–	2'–4"	–	–	–	–	–	–	–	–	–	–	–	0.281	0.281	0.748	0.321	0.321	–	0.0198	0.052
15"	3'–0"	2'–2"	–	–	2'–6"	–	–	–	–	–	–	–	–	–	–	–	0.281	0.281	0.802	ABOVE	0.321	–	0.0308	0.047
18"			–	–	2'–10"	–	–	–	–	–	–	–	–	–	–	–	0.281	0.281	0.909	MIN.H1	0.321	–	0.0442	0.065
24"		–	–		3'–4"	–	–	–	–	–	–	–	–	–		–	0.281	0.281	1.070		0.321		0.0784	0.113
30"			3'–4"	–	3'–2"	VA	1'–10"	4'–4"	4	1'–6"	3	4'–1"	3	4'–1"	45	0.147	0.374	0.521	1.305		0.378	0.108	0.1224	0.170
36"			3'–10"	–	3'–8"	RI	2'–4"	4'–4"	4	2'–0"	4	4'–1"	3	4'–1"	49	0.187	0.415	0.602	1.586	0.321	0.403	0.108	0.1760	0.238
42"		–		4'–5"	4'–4"	AB	2'–1"	3'–6"	4	1'–9"	3	3'–3"	3	3'–3"	38	0.135	0.373	0.508	1.811	H^2	0.391	0.117	0.2400	0.323
48"		–		5'–0"	4'–10"	LE	2'–8"	3'–6"	4	2'–6"	4	3'–3"	3	3'–3"	40	0.173	0.410	0.583	2.147		0.420	0.117	0.3131	0.422
54"	3'–0"	2'–2"	–	5'–7"	5'–4"		3'–3"	3'–6"	4	3'–0"	6	3'–3"	3	3'–3"	48	0.211	0.448	0.659	2.511		0.449	0.117	0.3958	0.535

DRAWN BY:
DESIGNED BY:
DATE APPROVED:
APPROVED BY:
REV. NO.
STD. NO. 4.14B

- The pipe shall be corrugated exterior/smooth interior pipe (Type S), conforming to the requirements of AASHTO Specifications M294 (latest edition) for Corrugated Polyethylene Pipe.
- Bell and spigot joints shall be required on all pipe. Bells shall cover at least two full corrugations on each section of pipe. The bell and spigot joint shall have "O"–ring rubber gaskets meeting ASTM F477 with the gasket factory installed, placed on the spigot end of the pipe. Pipe joints shall meet all requirements of AASHTO M294.
- All HDPE pipe installation shall be in accordance with the manufacturer's recommendations.
- Backfill material used to install HDPE pipe shall be Select Material, Class I–III, as defined by ASTM D2321 (Latest Edition) or AASHTO M145 Granular Materials:
  - A–1 and A–3 AASHTO Soils
  - A–2 AASHTO with the exception of A–2–7
  - A–4 and A–6 soil based on greater than (>) 30% retained on the No. 200 sieve
  - Upon submittal of written certification of material suitability by a licensed geotechnical engineer, select material may be used. All backfill shall be approved by the Town inspector prior to placement.
- No HDPE end treatments allowed. All end treatments should be reinforced concrete pipe or headwalls. Transitions from HDPE to concrete pipe shall be made with the appropriate adapter.
- Minimum bury depth of 18" from the outside wall of the pipe and maximum bury depth of 20' unless specific approval is obtained from the Town Engineer.

NO.	DATE	DESCRIPTION
1	5/17	add/modify notes

REVISIONS

HDPE PIPE

TOWN OF GARNER, N.C.

DRAWN BY:	DESIGNED BY:	REV. NO.
DATE APPROVED:		1
APPROVED BY:		STD. NO. 4.16

TOWN OF GARNER, N.C.

TRENCH INSTALLATION FOR HDPE (per AASHTO)

REVISIONS		
NO.	DATE	DESCRIPTION

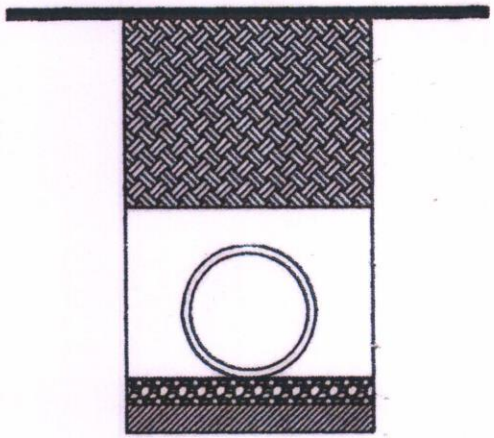

RECOMMENDED MINIMUM TRENCH WIDTHS

PIPE DIAM.	MIN. TRENCH WIDTH
4" (100mm)	21" (533mm)
6" (150mm)	23" (584mm)
8" (200mm)	26" (660mm)
10" (250mm)	28" (711mm)
12" (300mm)	30" (762mm)
15" (375mm)	34" (864mm)
18" (450mm)	39" (991mm)
24" (600mm)	48" (1219mm)
30" (750mm)	56" (1422mm)
36" (900mm)	64" (1626mm)
42" (1050mm)	72" (1829mm)
48" (1200mm)	80" (2032mm)
60" (1500mm)	96" (2438mm)

MINIMUM RECOMMENDED COVER BASED ON VEHICLE LOADING CONDITIONS**

PIPE DIAM.	SURFACE LIVE LOADING CONDITION	
	H-25	HEAVY CONSTRUCTION (75T AXLE LAOD) *
12" - 48" (300mm - 1200mm)	12" (305mm)	48" (1219mm)
60" (1500mm)	24" (610mm)	60" (1524mm)

* VEHICLES IN EXCESS OF 75T MAY REQUIRE ADDITIONAL COVER
**SEE BACKFILL REQUIREMENTS IN NOTE 6.

MAXIMUM RECOMMENDED COVER BASED ON VECHICLE LOADING CONDITIONS

PIPE DIAM.	CLASS I		CLASS II		CLASS III
	COMPACTED	DUMPED	95%	90%	95%
4" (100mm)	37 (11.3m)	18 (5.5m)	25 (7.6m)	18 (5.5m)	18 (5.5m)
6" (150mm)	44 (13.4m)	20 (6.1m)	29 (8.8m)	20 (6.1m)	21 (6.4m)
8" (200mm)	32 (9.8m)	15 (4.6m)	22 (6.7m)	15 (4.6m)	16 (4.9m)
10" (250mm)	38 (11.6m)	18 (5.5m)	26 (7.9m)	18 (5.5m)	18 (5.5m)
12" (300mm)	38 (11.6m)	18 (5.5m)	26 (7.9m)	18 (5.5m)	19 (5.8m)
15" (375mm)	42 (12.8m)	20 (6.1m)	28 (8.5m)	20 (6.1m)	20 (6.1m)
18" (450mm)	35 (10.7m)	17 (5.2m)	24 (7.3m)	17 (5.2m)	17 (5.2m)
24" (600mm)	30 (9.1m)	15 (4.6m)	21 (6.4m)	15 (4.6m)	15 (4.6m)
30" (750mm)	25 (7.6m)	12 (3.7m)	18 (5.5m)	12 (3.7m)	13 (4.0m)
36" (900mm)	29 (8.8m)	13 (4.0m)	20 (6.1m)	13 (4.0m)	14 (4.3m)
42" (1050mm)	27 (8.2m)	13 (4.0m)	19 (5.8m)	13 (4.0m)	13 (4.0m)
48" (1200mm)	25 (7.6m)	12 (3.7m)	17 (5.2m)	12 (3.7m)	12 (3.7m)
60" (1500mm)	29 (8.8m)	13 (4.0m)	20 (6.1m)	13 (4.0m)	14 (4.3m)

FILL HEIGHT TABLE GENERATED USING AASHTO SECTION 12, LOAD RESISTANCE FACTOR DESIGN (LRFD) PROCEDURE WITH THE FOLLOWING ASSUMPTIONS:
NO HYDROSTATIC PRESSURE,
UNIT WEIGHT OF SOIL (Ys) = 120 PCF

NOTES:

1. ALL PIPE SYSTEMS SHALL BE INSTALLED IN ACCORDANCE WITH ASTM D2321, "STANDARD PRACTICE FOR UNDERGROUND INSTALLATION OF THERMOPLASTIC PIPE FOR SEWERS AND OTHER GRAVITY FLOW APPLICATIONS", LATEST ADDITION

2. MEASURES SHOULD BE TAKEN TO PREVENT MIGRATION OF NATIVE FINES INTO BACKFILL MATERIAL, WHEN REQUIRED.

3. FOUNDATION: WHERE THE TRENCH BOTTOM IS UNSTABLE, THE CONTRACTOR SHALL EXCAVATE TO A DEPTH REQUIRED BY THE ENGINEER AND REPLACE WITH SUITABLE MATERIAL AS SPECIFIED BY THE ENGINEER. AS AN ALTERNATIVE AND AT THE DISCRETION OF THE DESIGN ENGINEER, THE TRENCH BOTTOM MAY BE STABILIZED USING A GEOTEXTILE MATERIAL.

4. BEDDING: SUITABLE MATERIAL SHALL BE CLASS I, II OR III. THE CONTRACTOR SHALL PROVIDE DOCUMENTATION FOR MATERIAL SPECIFICATION TO ENGINEER. UNLESS OTHERWISE NOTED BY THE ENGINEER, MINIMUM BEDDING THICKNESS SHALL BE 4" (100mm) FOR 4"-24" (100mm-600mm); 6" (150mm) FOR 30"-60" (750mm-1500mm).

5. INITIAL BACKFILL: SUITABLE MATERIAL SHALL BE CLASS I, II OR III IN THE PIPE ZONE EXTENDING NOT LESS THAN 6" ABOVE CROWN OF PIPE. THE CONTRACTOR SHALL PROVIDE DOCUMENTATION FOR MATERIAL SPECIFICATION TO ENGINEER. MATERIAL SHALL BE INSTALLED AS REQUIRED IN ASTM D2321, LATEST EDITION.

6. MINIMUM COVER: MINIMUM COVER, H, IN NON-TRAFFIC APPLICATIONS (GRASS OR LANDSCAPE AREAS) IS 12" FROM THE TOP OF PIPE TO GROUND SURFACE. ADDITIONAL COVER MAY BE REQUIRED TO PREVENT FLOTATION. FOR TRAFFIC APPLICATIONS, MINIMUM COVER, H, IS 12" UP TO 48" DIAMETER PIPE AND 24" OF COVER FOR 60" DIAMETER PIPE, MEASURED FROM TOP OF PIPE TO BOTTOM OF FLEXIBLE PAVEMENT OR TO TOP OF RIGID PAVEMENT. FOR TRAFFIC APPLICATIONS WITH LESS THAN FOUR FEET OF COVER, EMBEDMENT OF THE PIPE SHALL BE USING ONLY A CLASS I OR CLASS II BACKFILL.

DRAWN BY:	DATE APPROVED:	APPROVED BY:
DESIGNED BY:		
REV. NO.	STD. NO. 4.16A	

- The pipe and fittings shall be an annular corrugated wall and an essentially smooth interior wall (double wall), or an annular corrugated wall and an essentially smooth interior and exterior wall (triple wall) conforming to the requirements of:

  - ASTM F2764 and
  - AASHTO Specifications M330 (latest edition) for Corrugated Polypropylene Pipe.

- Bell and spigot joints shall be required on all pipe. Bells shall cover at least two full corrugations on each section of pipe. The bell and spigot joint shall have "O"–ring rubber gaskets meeting ASTM F477 with the gasket factory installed, placed on the spigot end of the pipe. Pipe joints shall meet all requirements of AASHTO M330.

- All PP pipe installation shall be in accordance with the manufacturer's recommendations.

- Backfill material used to install PP pipe shall be Select Material, Class I–IV, as defined by ASTM D2321 (Latest Edition) or AASHTO M145 Granular Materials:

  - A–1 and A–3 AASHTO Soils (Class II)
  - A–2 AASHTO (Class III) with the exception of A–2–7
  - A–4 and A–6 soil based on greater than (>) 30% retained on the No. 200 sieve (Class III)
  - A–2–7: A–4 and A–6 soil based on less than (<) 30% retained on the No. 200 sieve. (Class IV)
  - Upon submittal of written certification of material suitability by a licensed geotechnical engineer, select material may be used. All backfill shall be approved by the Town inspector prior to placement.

- No PP end treatments allowed. All end treatments should be reinforced concrete pipe or headwalls. Transitions from PP to concrete pipe shall be made with the appropriate adapter.

- Minimum bury depth of 18" from the outside wall of the pipe and maximum bury depth of 25' unless specific approval is obtained from the Town Engineer.

NO.	DATE	DESCRIPTION

REVISIONS

POLYPROPYLENE PIPE	DRAWN BY:	DESIGNED BY:	REV. NO.
	DATE APPROVED:		
TOWN OF GARNER, N.C.	APPROVED BY:		STD. NO. 4.17

POLYPROPYLENE TRENCH INSTALLATION DETAIL

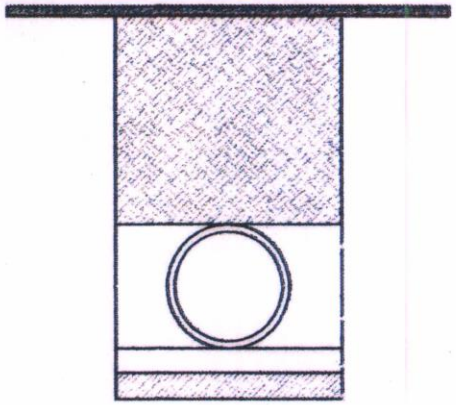

NOTES:

1. ALL PIPE SYSTEMS SHALL BE INSTALLED IN ACCORDANCE WITH ASTM D2321, "STANDARD PRACTICE FOR UNDERGROUND INSTALLATION OF THERMOPLASTIC PIPE FOR SEWERS AND OTHER GRAVITY FLOW APPLICATIONS", LATEST ADDITION, WITH THE EXCEPTION THAT THE INITIAL BACKFILL MAY EXTEND TO THE CROWN OF THE PIPE. SOIL CLASSIFICATIONS ARE PER THE LATEST VERSION OF ASTM D2321. CLASS IVB MATERIALS (MH, CH) AS DEFINED IN PREVIOUS VERSIONS OF ASTM D2321 ARE NOT APPROPRIATE BACKFILL MATERIALS.

2. MEASURES SHOULD BE TAKEN TO PREVENT MIGRATION OF NATIVE FINES INTO BACKFILL MATERIAL, WHEN REQUIRED.

3. FOUNDATION: WHERE THE TRENCH BOTTOM IS UNSTABLE, THE CONTRACTOR SHALL EXCAVATE TO A DEPTH REQUIRED BY THE ENGINEER AND REPLACE WITH SUITABLE MATERIAL AS SPECIFIED BY THE ENGINEER. AS AN ALTERNATIVE AND AT THE DISCRETION OF THE DESIGN ENGINEER, THE TRENCH BOTTOM MAY BE STABILIZED USING A GEOTEXTILE MATERIAL.

4. BEDDING: SUITABLE MATERIAL SHALL BE CLASS I, II, III, OR IV. THE CONTRACTOR SHALL PROVIDE DOCUMENTATION FOR MATERIAL SPECIFICATION TO ENGINEER. COMPACTION SHALL BE SPECIFIED BY THE ENGINEER IN ACCORDANCE WITH TABLE 3 FOR THE APPLICABLE FILL HEIGHTS LISTED. UNLESS OTHERWISE NOTED BY THE ENGINEER, MINIMUM BEDDING THICKNESS SHALL BE 4" (100mm) FOR 12"-24" (300mm-600mm) DIAMETER PIPE; 6" (150mm) FOR 30"-60" (750mm-1500mm) DIAMETER PIPE. THE MIDDLE 1/3 BENEATH THE PIPE INVERT SHALL BE LOOSELY PLACED. PLEASE NOTE. CLASS IV MATERIAL HAS LIMITED APPLICATION AND CAN BE DIFFICULT TO PLACE AND COMPACT; USE ONLY WITH THE APPROVAL OF A SOIL EXPERT.

5. INITIAL BACKFILL: SUITABLE MATERIAL SHALL BE CLASS I, II, III, OR IV IN THE PIPE ZONE EXTENDING TO THE CROWN OF THE PIPE. THE CONTRACTOR SHALL PROVIDE DOCUMENTATION FOR MATERIAL SPECIFICATION TO ENGINEER. MATERIAL SHALL BE INSTALLED AS REQUIRED IN ASTM D2321, LATEST EDITION. COMPACTION SHALL BE SPECIFIED BY THE ENGINEER IN ACCORDANCE WITH TABLE 3 FOR THE APPLICABLE FILL HEIGHTS LISTED. PLEASE NOTE, CLASS IV MATERIAL HAS LIMITED APPLICATION AND CAN BE DIFFICULT TO PLACE AND COMPACT; USE ONLY WITH THE APPROVAL OF A SOIL EXPERT.

6. MINIMUM COVER: MINIMUM COVER, H, IN NON-TRAFFIC APPLICATIONS (GRASS OR LANDSCAPE AREAS) IS 12" (300mm) FROM THE TOP OF PIPE TO GROUND SURFACE. ADDITIONAL COVER MAY BE REQUIRED TO PREVENT FLOTATION. FOR TRAFFIC APPLICATIONS; CLASS I OR II MATERIAL COMPACTED TO 90% SPD AND CLASS III COMPACTED TO 95% SPD IS REQUIRED. FOR TRAFFIC APPLICATIONS, MINIMUM COVER, H, IS 12" (300mm) UP TO 48" (1200mm) DIAMETER PIPE AND 24" (600mm) OF COVER FOR 60" (1500mm) DIAMETER PIPE, MEASURED FROM TOP OF PIPE TO BOTTOM OF FLEXIBLE PAVEMENT OR TO TOP OF RIGID PAVEMENT.

7. FOR ADDITIONAL INFORMATION SEE PRODUCT MANUFACTURER'S TECHNICAL GUIDANCE.

TABLE 1, RECOMMENDED MINIMUM TRENCH WIDTHS

PIPE DIAM.	MIN. TRENCH WIDTH
12" (300mm)	30" (762mm)
15" (375mm)	34" (864mm)
18" (450mm)	39" (991mm)
24" (600mm)	48" (1219mm)
30" (750mm)	56" (1422mm)
36" (900mm)	64" (1626mm)
42" (1050mm)	72" (1829mm)
48" (1200mm)	80" (2032mm)
60" (1500mm)	96" (2438mm)

TABLE 2, MINIMUM RECOMMENDED COVER BASED ON VEHICLE LOADING CONDITIONS

	SURFACE LIVE LOADING CONDITION	
PIPE DIAM.	H-25	HEAVY CONSTRUCTION (75T AXLE LOAD) *
12" - 48" (300mm - 1200mm)	12" (305mm)	48" (1219mm)
60" (1500mm)	24" (610mm)	60" (1524mm)

* VEHICLES IN EXCESS OF 75T MAY REQUIRE ADDITIONAL COVER

TABLE 3, MAXIMUM COVER FOR POLYPROPYLENE PIPE, ft

	CLASS I	CLASS II			CLASS III		CLASS IV
PIPE DIA	COMPACTED	95%	90%	85%	95%	90%	95%
12" (300mm)	41 (12.5m)	28 (8.5m)	21 (6.4m)	16 (4.9m)	20 (6.1m)	16 (4.9m)	16 (4.9m)
15" (375mm)	42 (12.8m)	29 (8.8m)	21 (6.4m)	16 (4.9m)	21 (6.4m)	16 (4.9m)	16 (4.9m)
18" (450mm)	44 (13.4m)	30 (9.1m)	21 (6.4m)	16 (4.9m)	22 (6.7m)	17 (5.2m)	16 (4.9m)
24" (600mm)	37 (11.3m)	26 (7.9m)	18 (5.5m)	14 (4.3m)	19 (5.8m)	14 (4.3m)	14 (4.3m)
30" (750mm)	39 (11.9m)	27 (8.2m)	19 (5.8m)	14 (4.3m)	19 (5.8m)	15 (4.6m)	14 (4.3m)
36" (900mm)	28 (8.5m)	20 (6.1m)	14 (4.3m)	10 (3.0m)	14 (4.3m)	11 (3.4m)	10 (3.0m)
42" (1050mm)	30 (9.1m)	21 (6.4m)	14 (4.3m)	10 (3.0m)	15 (4.6m)	11 (3.4m)	10 (3.0m)
48" (1200mm)	29 (8.8m)	20 (6.1m)	14 (4.3m)	9 (2.7m)	14 (4.3m)	10 (3.0m)	10 (3.0m)
60" (1500mm)	29 (8.8m)	20 (6.1m)	14 (4.3m)	9 (2.7m)	14 (4.3m)	10 (3.0m)	9 (2.7m)

FILL HEIGHT TABLE GENERATED USING AASHTO SECTION 12, LOAD RESISTANCE FACTOR DESIGN (LRFD) PROCEDURE WITH THE FOLLOWING ASSUMPTIONS:
NO HYDROSTATIC PRESSURE
UNIT WEIGHT OF SOIL (γs) = 120 PCF

NO.	DATE	DESCRIPTION

REVISIONS

TOWN OF GARNER, N.C.

TRENCH INSTALLATION FOR POLYPROPYLENE

DRAWN BY:

DESIGNED BY:

DATE APPROVED:

APPROVED BY:

STD. NO. 4.17A

REV. NO.

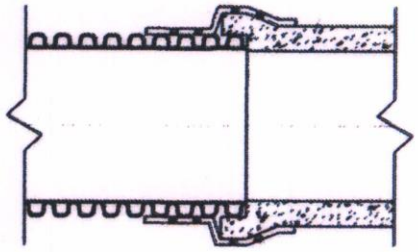

MODIFIED BELL RCP FLARED
END SECTION BELL CONNECTION

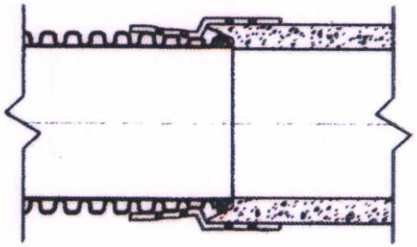

TONGUE & GROOVE RCP FLARED
END SECTION BELL CONNECTION

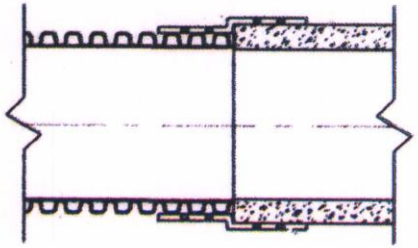

PLAIN OR CUT END RCP FLARED
END SECTION CONNECTION

NOTES:

1. WHEN CONNECTING REINFORCED CONCRETE PIPE (RCP) TO HIGH DENSITY POLYETHYLENE (HDPE) OR POLYPROPYLENE (PP) PIPE, THE PREFERRED CONNECTION METHOD IS A MODIFIED BELL TO PLAIN OR CUT END PIPE.
2. THE CONNECTION IS SECURED WITH A MARMAC DISSIMILAR PIPE COUPLER, THAT IS SIZED TO FIT THE LARGEST OUTSIDE DIAMETER (O.D.) IN THE CONNECTION.
3. THE PIPE AND CONNECTION SHOULD BE BACKFILLED PER ASTM D2321 OR LOCAL GUIDELINES, FOLLOWING THE MORE STRINGENT INSTALLATION REQUIREMENT.
4. MARMAC DISSIMILAR PIPE COUPLER'S JOINT PERFORMANCE IS OBTAINED THROUGH A PROPER INSTALLATION. IT IS IMPORTANT THAT MARMAC'S INSTALLATION INSTRUCTIONS ARE CLOSELY FOLLOWED (JOINT PERFORMANCE PER MAR MAC).
5. RCP VARIES PER MANUFACTURER. IT IS IMPORTANT THE MATING END MEETS A PRESCRIBED CONFIGURATION WHEN CONNECTION TO HDPE OR PP PIPE.

INSTALLATION INSTRUCTIONS:

1. BEFORE JOINING RCP TO HDPE\PP USING THE COUPLER, VERIFY THE BEDDING IS GRADED TO ENSURE THE PIPE, COUPLER AND RCP ARE FULLY SUPPORTED BY THE BEDDING. A BELL HOLE IS NORMALLY REQUIRED FOR THE MODIFIED BELL.
2. THOROUGHLY CLEAN ALL MATING SURFACES ON HDPE\PP PIPE AND RCP, INCLUDING EXTERIOR SURFACES WHERE THE COUPLER WILL BE PLACED.
3. PEEL THE MAIN PROTECTIVE FILM FROM THE COUPLER (TAKING GREAT CARE TO NOT TOUCH IT ON ITSELF) AND POSITION IT IN PLACE UNDER THE ELEVATED RCP, SO AT MINIMUM BANDS WILL WRAP AROUND THE RCP AND AT MINIMUM TWO BANDS WILL EVENTUALLY BE WRAPPED AROUND THE HDPE\PP PIPE. IT WILL BE CRITICAL TO ENSURE THAT THE BANDS FOR THE HDPE\PP PIPE ARE CENTERED OVER THE VALLEYS FOR THE FIRST TWO FULL CORRUGATIONS.
4. WHILE ELEVATED OR WITH THE RCP IN PLACE, CONNECT THE CLEAN HDPE\PP PIPE INTO THE RCP CONNECTION AND ALIGN THE CONNECTION. THEN, WHILE WRAPPING THE COUPLER AROUND THE CONNECTION, PRESS THE COUPLER IN PLACE.
5. INSERT THE COUPLER'S BANDS INTO THE TIGHTENING MECHANISMS (HOSE CLAMP OR RATCHET) AND THEN THREAD THE BAND'S END INTO THE BAND SHEATHS.
6. BEFORE TIGHTENING BANDS, TAKE CARE TO ENSURE THEY ALIGN WITH THE CORRUGATION VALLEYS. DO NOT ALLOW THE BANDS TO CROSS OVER CORRUGATIONS DURING THE TIGHTENING PROCESS.
7. TIGHTEN HOSE CLAMPS WITH AN IMPACT DRILL AND THE RATCHETS BY HAND.
8. WHEN TIGHTENING BANDS, FIRST PARTIALLY TIGHTEN THE OUTER BANDS, THEN PARTIALLY TIGHTEN THE INNER BANDS, TO SECURE THE COUPLER IN PLACE, ALTERNATE TIGHTENING THE BANDS UNTIL EACH IS FULLY TIGHTENED.
9. THE HDPE\PP AND RCP SHOULD BE ALIGNED WHEN THE COUPLER IS IN PLACE.
10. FINALLY, PEEL THE PROTECTIVE FILM FROM THE HOSE CLAMP OR RATCHET COVER AND HAND PRESS INTO PLACE.

REVISIONS		
NO.	DATE	DESCRIPTION

DISSIMILAR PIPE CONNECTIONS TO RCP

TOWN OF GARNER, N.C.

DRAWN BY: | DESIGNED BY:

DATE APPROVED:

APPROVED BY:

REV. NO.

STD. NO. 4.18

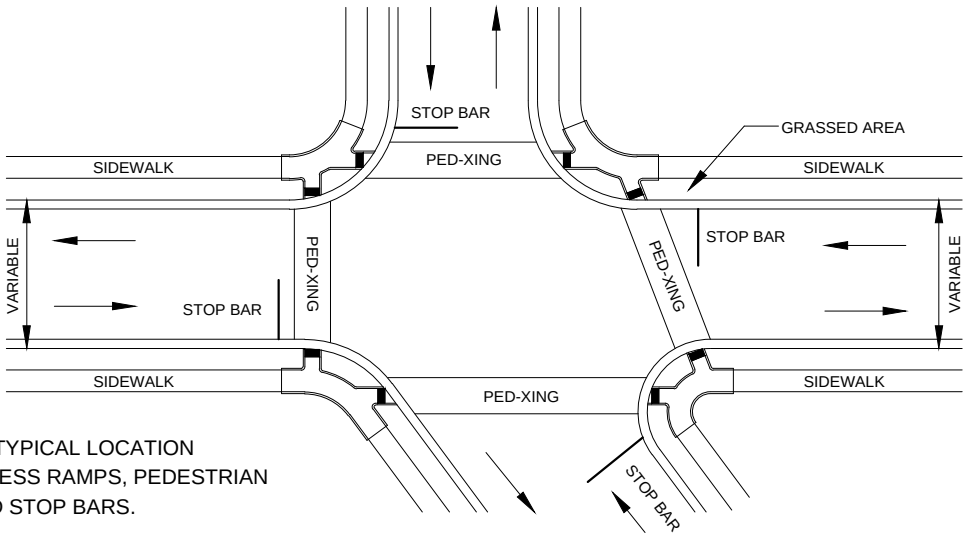

DETAIL SHOWING TYPICAL LOCATION OF SIDEWALK ACCESS RAMPS, PEDESTRIAN CROSSWALKS AND STOP BARS.

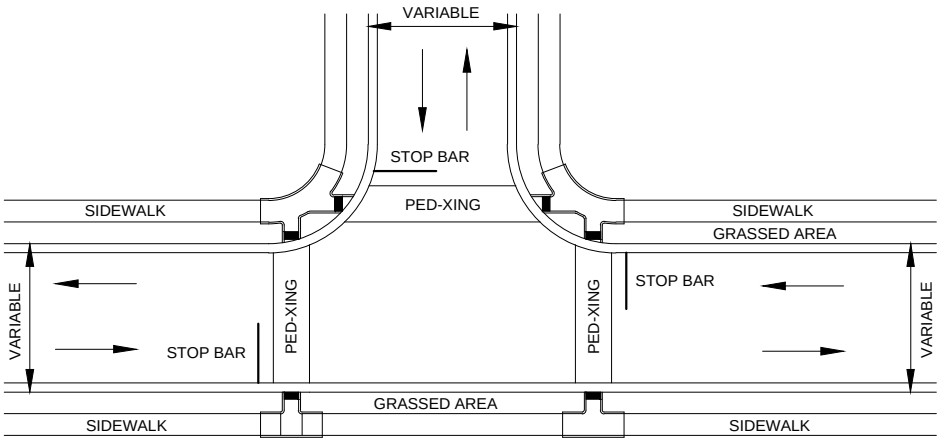

DETAIL SHOWING TYPICAL LOCATION OF SIDEWALK ACCESS RAMPS PEDESTRIAN CROSSWALKS AND STOP BARS FOR TEE INTERSECTION.

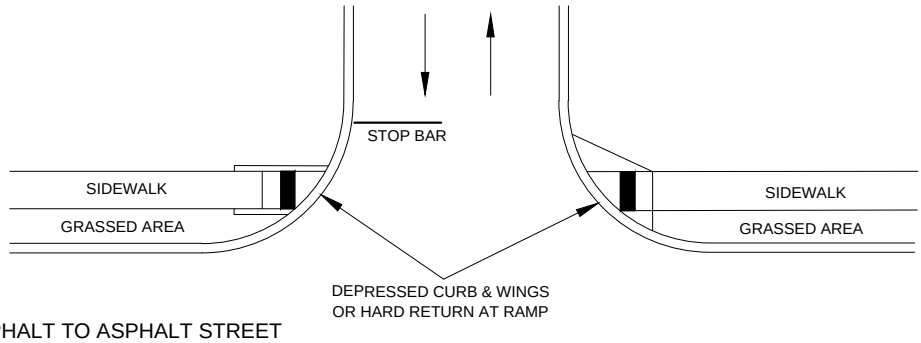

FOR RAMPS AT ASPHALT TO ASPHALT STREET TYPE DRIVEWAYS OR PRIVATE STREET TIE IN.

CURB RAMPS	DRAWN BY: C. NIX	REVISED 4/2019
TOWN OF GARNER, N.C.	APPROVED BY: C. JOHNSON	STD. NO. 5.00

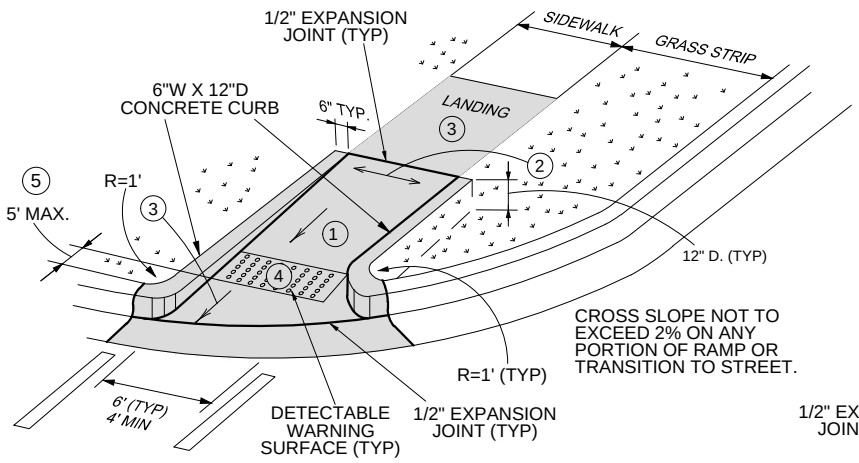

PAY LIMITS FOR CURB RAMP

CONCRETE DEPTH	
RAMP / FLARE	6"
LANDING	4"

TYPE N-1 (CURB TYPE)

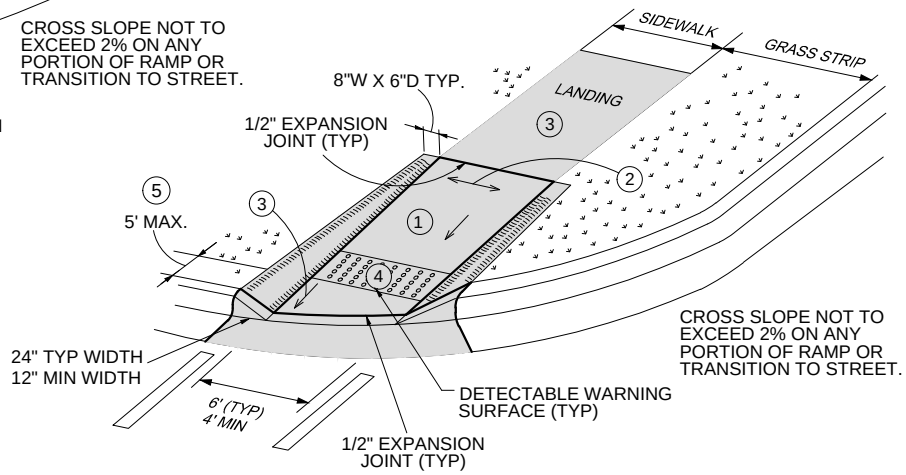

TYPE N-1A (FLARE TYPE)

1. 8.33% (12:1) MAX RAMP SLOPE
2. CROSS SLOPE: 2.00%
3. CURB RAMPS REQUIRE A (4'-0") MINIMUM LANDING WITH A MAXIMUM CROSS SLOPE AND LONGITUDINAL SLOPE OF 2.00% WHERE PEDESTRIANS PERFORM TURNING MANEUVERS. SLOPE TO DRAIN TO CURB.
4. RAMPS AND DOMES SHALL BE INSTALLED THE SAME WIDTH AS THE SIDEWALK.
5. IF LENGTH EXCEEDS 5', TRUNCATED DOMES SHALL BE INSTALLED ALONG THE BACK OF THE CURB COVERING THE FULL WIDTH OF THE RAMP.

NOTE: USE SMALL FLARES ONLY WHEN A CURB TYPE DIRECTLY CONFLICTS WITH APPROACHING VEHICULAR TURNING MOVEMENTS.

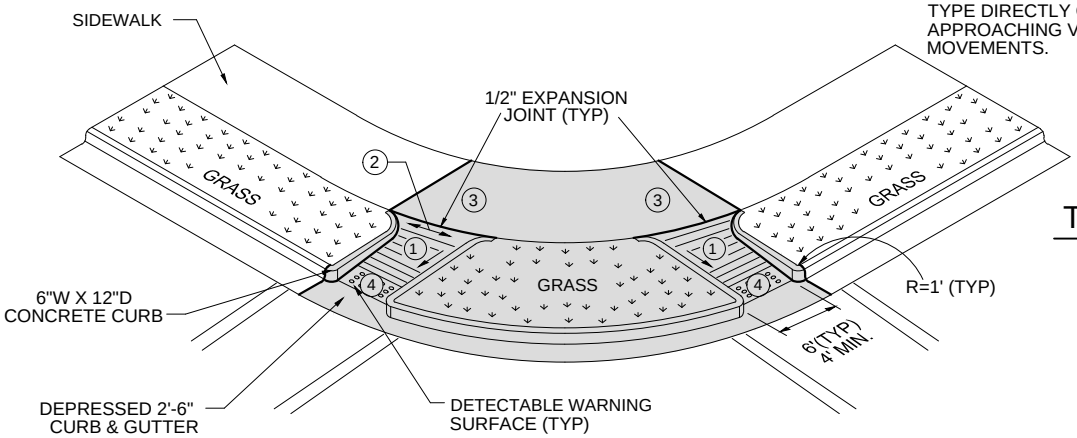

TYPE N-2 (RADIUS)

CONCRETE DEPTH	
RAMP / FLARE	6"
LANDING	4"

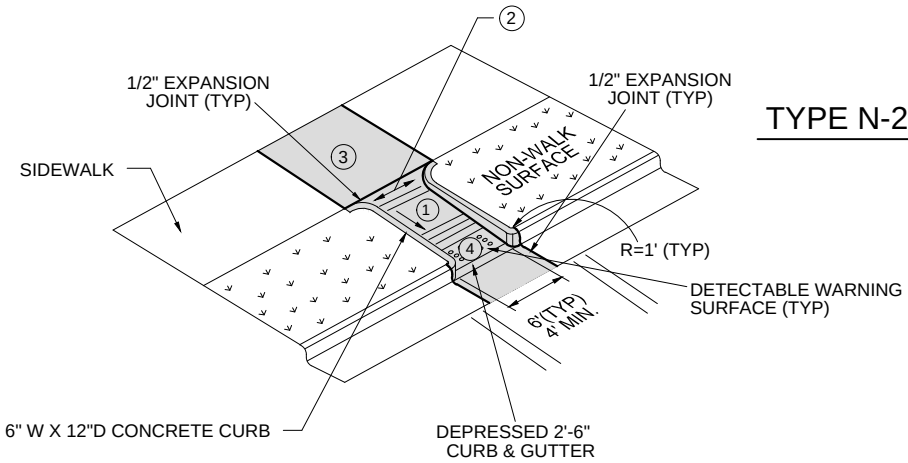

TYPE N-2 (TEE INTERSECTION)

CURB RAMPS – NEW DEVELOPMENT	DRAWN BY: C. NIX	REVISED 4/2019
TOWN OF GARNER, N.C.	APPROVED BY: C. JOHNSON	STD. NO. 5.01

PAY LIMITS FOR CURB RAMP

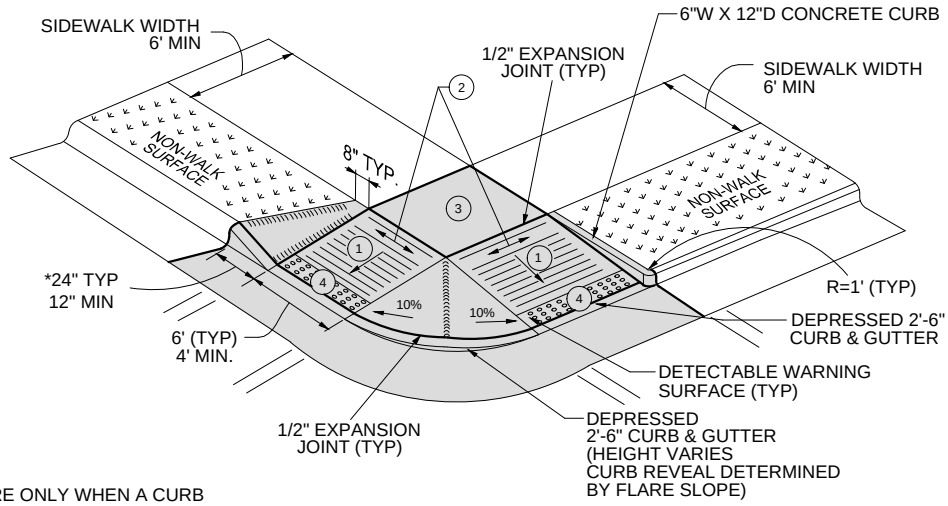

CONCRETE DEPTH	
RAMP / FLARE	6"
LANDING	4"

NOTE: * USE SMALL FLARE ONLY WHEN A CURB WOULD DIRECTLY CONFLICT WITH APPROACHING VEHICLE TURNING MOVEMENTS.

TYPE N-3

1. 8.33% (12:1) MAX RAMP SLOPE
2. CROSS SLOPE: 2.00%
3. CURB RAMPS REQUIRE A (4'-0") MINIMUM LANDING WITH A MAXIMUM CROSS SLOPE AND LONGITUDINAL SLOPE OF 2.00% WHERE PEDESTRIANS PERFORM TURNING MANEUVERS. SLOPE TO DRAIN TO CURB.
4. RAMPS AND DOMES SHALL BE INSTALLED THE SAME WIDTH AS THE SIDEWALK.

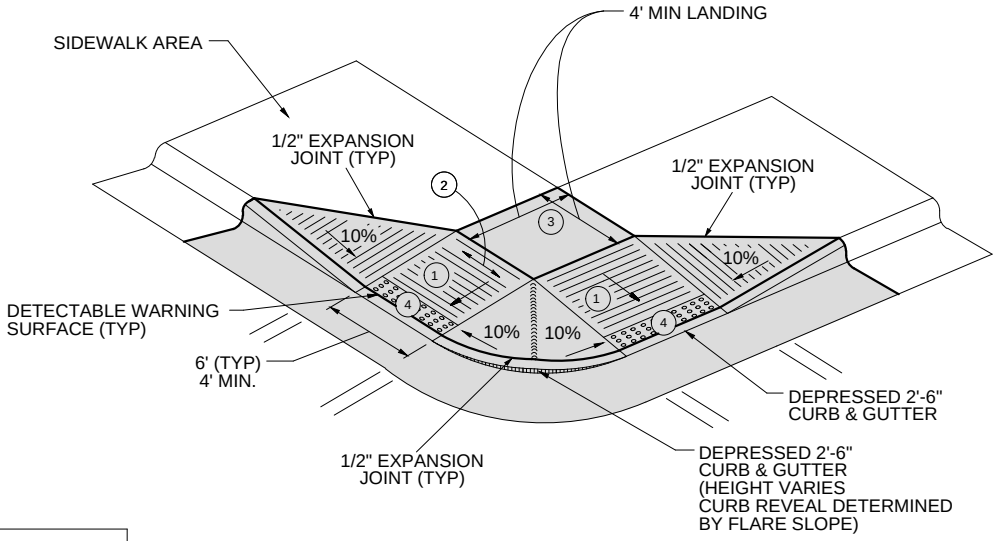

CONCRETE DEPTH	
RAMP / FLARE	6"
LANDING	4"

TYPE N-3A
(COMMERCIAL/RETAIL USE)

CURB RAMPS – NEW DEVELOPMENT	DRAWN BY: C. NIX	REVISED 4/2019
TOWN OF GARNER, N.C.	APPROVED BY: C. JOHNSON	STD. NO. 5.02

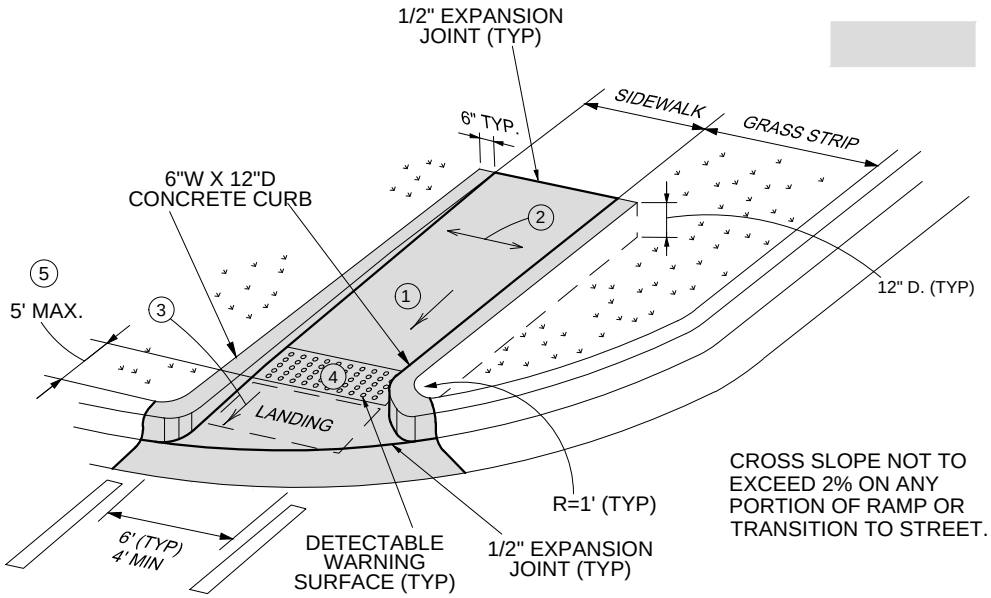

TYPE N-4

1. SLOPE TO MEET GRADE, 15' MAXIMUM.
2. CROSS SLOPE: 2.00%
3. CURB RAMPS REQUIRE A (4'-0") MINIMUM LANDING WITH A MAXIMUM CROSS SLOPE AND LONGITUDINAL SLOPE OF 2.00% WHERE PEDESTRIANS PERFORM TURNING MANEUVERS. SLOPE TO DRAIN TO CURB.
4. RAMPS AND DOMES SHALL BE INSTALLED THE SAME WIDTH AS THE SIDEWALK.
5. IF LENGTH EXCEEDS 5', TRUNCATED DOMES SHALL BE INSTALLED ALONG THE BACK OF THE CURB COVERING THE FULL WIDTH OF THE RAMP.

CONCRETE DEPTH	
RAMP	6"
LANDING	4"

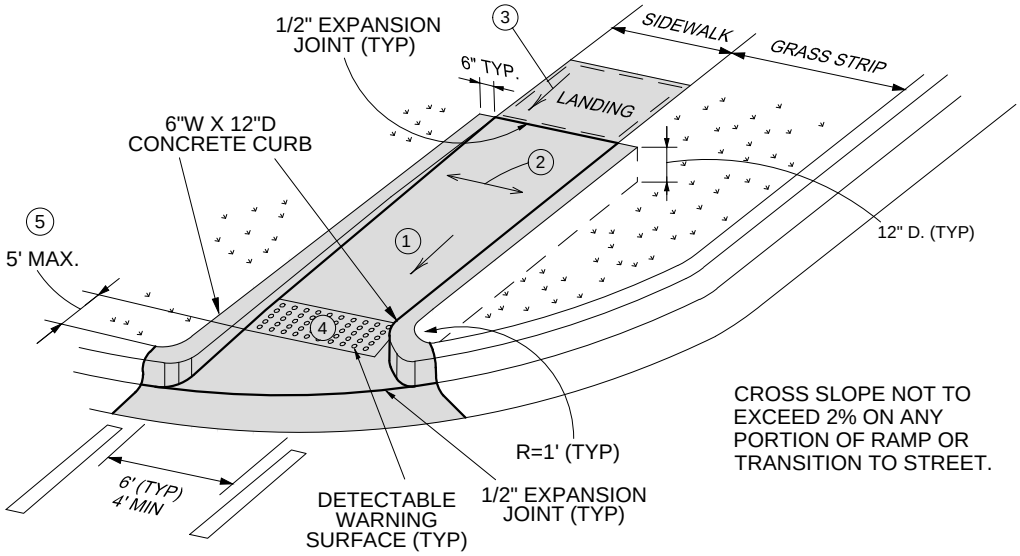

TYPE N-4A

CURB RAMPS – NEW DEVELOPMENT	DRAWN BY: C. NIX	REVISED 4/2019
TOWN OF GARNER, N.C.	APPROVED BY: C. JOHNSON	STD. NO. 5.03

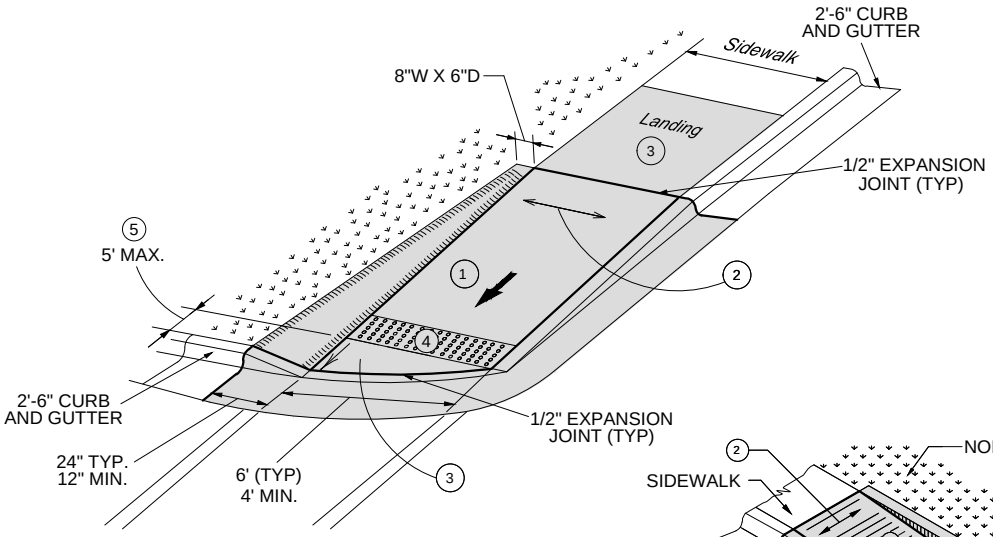

PAY LIMITS FOR CURB RAMP

CONCRETE DEPTH	
RAMP / FLARES	6"
LANDING	4"

TYPE R-1

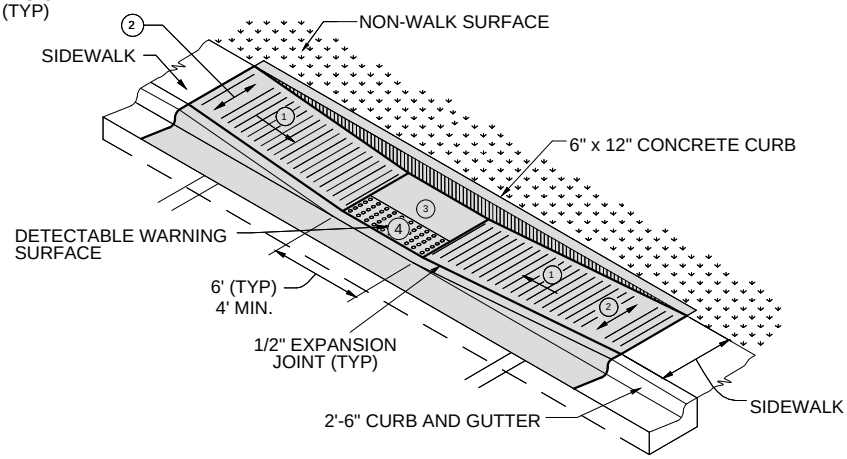

TYPE R-2

(USE ONLY WHERE WATER WILL NOT POND WITHIN LANDING)

1. 8.33% (12:1) MAX RAMP SLOPE
2. CROSS SLOPE: 2.00%
3. CURB RAMPS REQUIRE A (4'-0") MINIMUM LANDING WITH A MAXIMUM CROSS SLOPE AND LONGITUDINAL SLOPE OF 2.00% WHERE PEDESTRIANS PERFORM TURNING MANEUVERS. SLOPE TO DRAIN TO CURB.
4. RAMPS AND DOMES SHALL BE INSTALLED THE SAME WIDTH AS THE SIDEWALK.
5. IF LENGTH EXCEEDS 5', TRUNCATED DOMES SHALL BE INSTALLED ALONG THE BACK OF THE CURB COVERING THE FULL WIDTH OF THE RAMP.

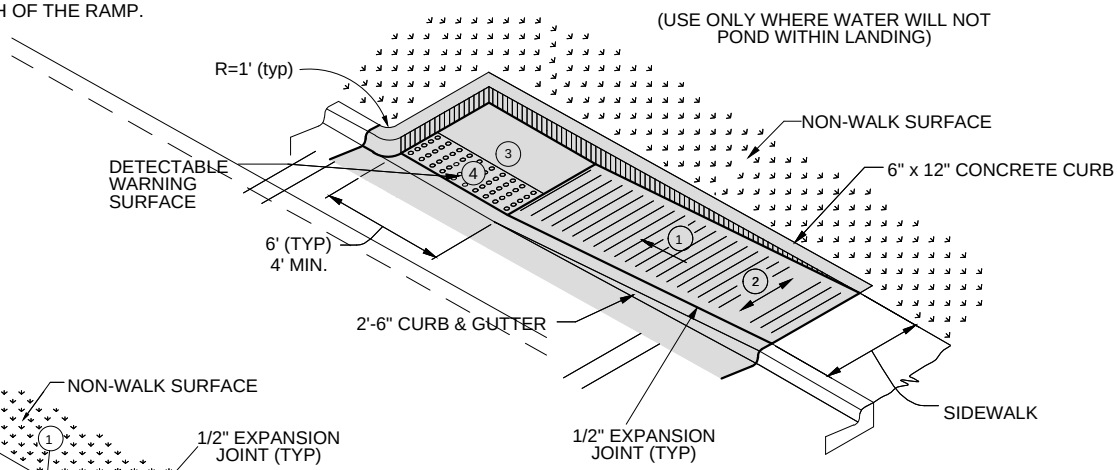

TYPE R-2A

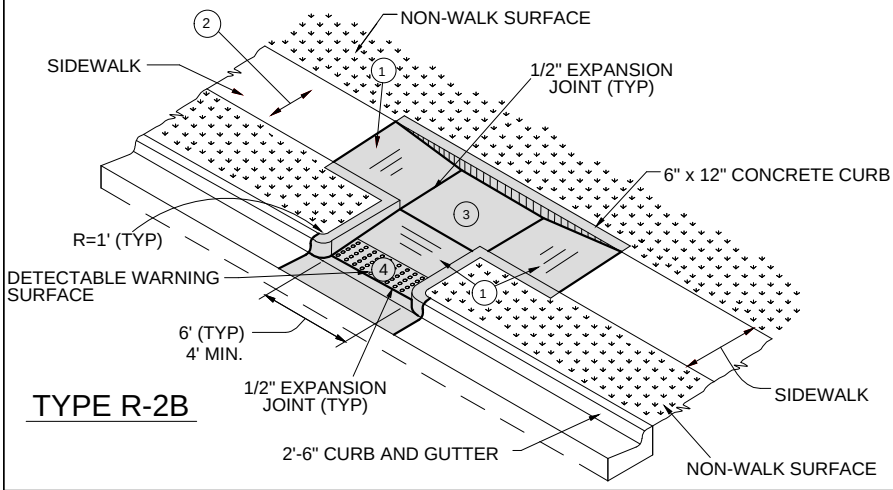

TYPE R-2B

CONCRETE DEPTH	
RAMP / FLARES	6"
LANDING	4"

CURB RAMPS – RETROFIT	DRAWN BY: C. NIX	REVISED 4/2019
TOWN OF GARNER, N.C.	APPROVED BY: C. JOHNSON	STD. NO. 5.04

PAY LIMITS FOR CURB RAMP

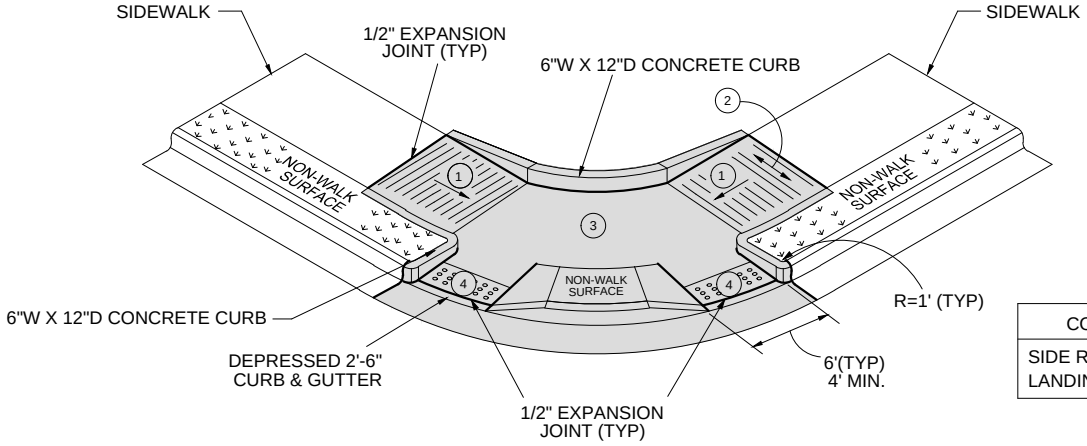

CONCRETE DEPTH	
SIDE RAMPS	4"
LANDING & OPENINGS	6"

TYPE R-3

1. 8.33% (12:1) MAX RAMP SLOPE
2. CROSS SLOPE: 2.00%
3. CURB RAMPS REQUIRE A (4'-0") MINIMUM LANDING WITH A MAXIMUM CROSS SLOPE AND LONGITUDINAL SLOPE OF 2.00% WHERE PEDESTRIANS PERFORM TURNING MANEUVERS. SLOPE TO DRAIN TO CURB.
4. RAMPS AND DOMES SHALL BE INSTALLED THE SAME WIDTH AS THE SIDEWALK.

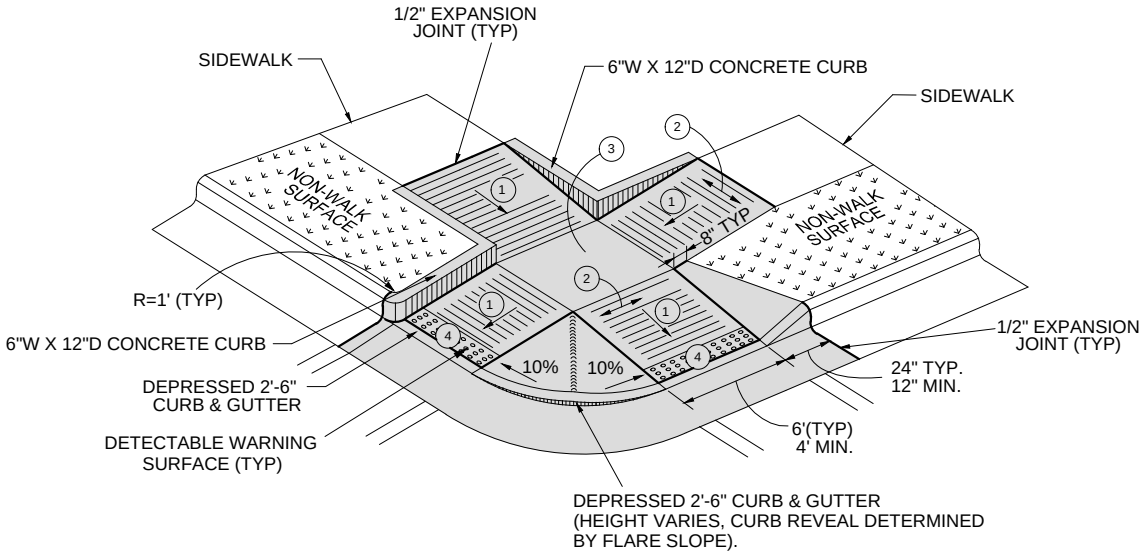

CONCRETE DEPTH	
SIDE RAMPS	4"
LANDING & CURB RAMPS	6"

TYPE R-4

CURB RAMPS – RETROFIT	DRAWN BY: C. NIX	REVISED 4/2019
TOWN OF GARNER, N.C.	APPROVED BY: C. JOHNSON	STD. NO. 5.05

PAY LIMITS FOR CURB RAMP

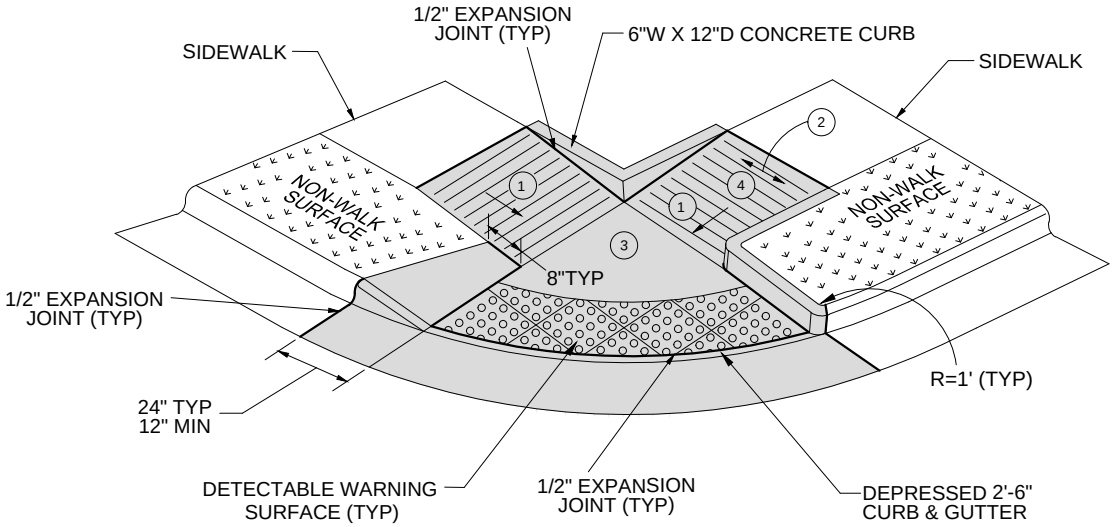

SMALL RADIUS
LESS THAN 15'

CONCRETE DEPTH	
SIDE RAMPS	4"
LANDING & CURB RAMPS	6"

1. 8.33% (12:1) MAX RAMP SLOPE
2. CROSS SLOPE: 2.00%
3. CURB RAMPS REQUIRE A (4'-0") MINIMUM LANDING WITH A MAXIMUM CROSS SLOPE AND LONGITUDINAL SLOPE OF 2.00% WHERE PEDESTRIANS PERFORM TURNING MANEUVERS. SLOPE TO DRAIN TO CURB.
4. RAMPS SHALL BE INSTALLED THE SAME WIDTH AS THE SIDEWALK.

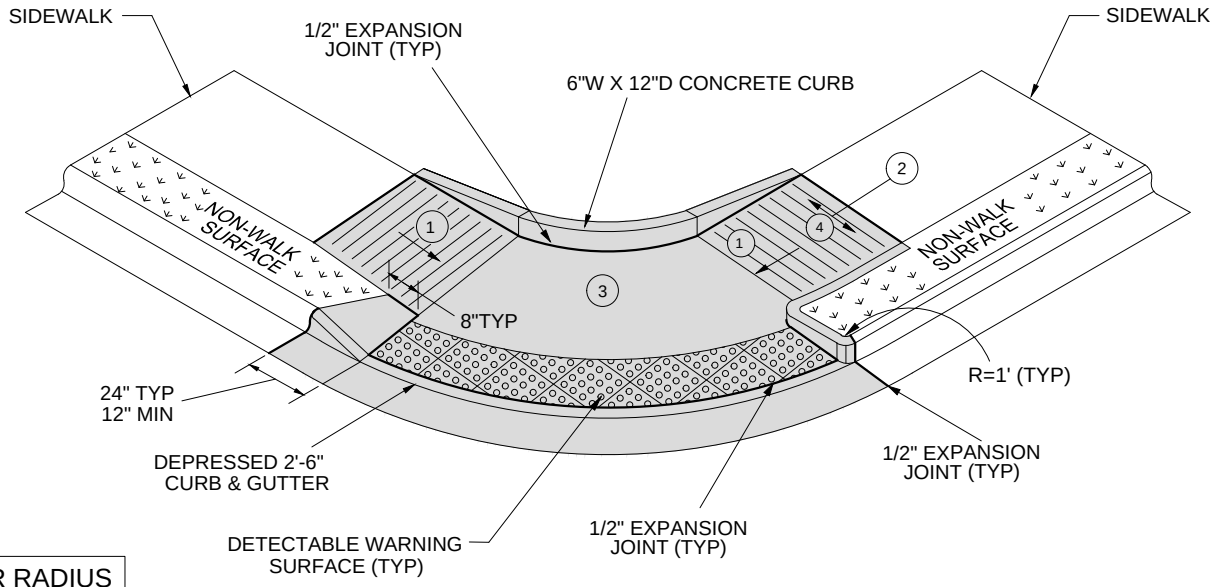

LARGER RADIUS
15' OR GREATER

CURB RAMPS – RETROFIT – SHARED FLARE	DRAWN BY: C. NIX	REVISED 4/2019
TOWN OF GARNER, N.C.	APPROVED BY: C. JOHNSON	STD. NO. 5.06

CURB RAMPS
GENERAL NOTES

1. STANDARD CURB RAMPS HAVE BEEN DEVELOPED IN ACCORDANCE WITH THE AMERICANS WITH DISABILITIES ACT (ADA) AND PUBLIC RIGHT OF WAY ACCESS GUIDELINES (PROWAG).

2. CURB RAMPS SHALL BE PROVIDED AT LOCATIONS AS SHOWN ON THE PLANS OR AS DIRECTED BY THE ENGINEER. SIDEWALK ACCESS RAMPS SHALL BE LOCATED AS INDICATED IN THE DETAIL, HOWEVER, THE LOCATION MAY BE ADJUSTED IN COORDINATION WITH EXISTING LIGHT POLES, FIRE HYDRANTS, DROP INLETS, ETC. AFFECT PLACEMENT.

3. DOUBLE WHEELCHAIR RAMPS ARE TO BE INSTALLED AT ALL PUBLIC STREET INTERSECTIONS WHERE SIDEWALK IS REQUIRED.

4. THE WALKING SURFACE SHALL BE SLIP RESISTANT. THE COLOR FOR THE DETECTABLE WARNING AREA SHALL BE YELLOW, GRAY, CHARCOAL, OR BLACK FOR CONTRAST.

5. NO SLOPE ON THE SIDEWALK ACCESS RAMP SHALL EXCEED 1"/FT (12:1) IN RELATIONSHIP TO THE GRADE OF THE STREET.

6. IN NO CASE SHALL THE WIDTH OF THE SIDEWALK ACCESS RAMP BE LESS THAN 48" ALL RAMPS SHALL BE INSTALLED THE SAME WIDTH AS THE SIDEWALK.

7. USE CLASS A (3000 PSI) CONCRETE WITH A SIDEWALK FINISH IN ORDER TO OBTAIN A ROUGH NONSKID SURFACE.

8. A 1/2" EXPANSION JOINT INSTALLED FULL DEPTH WILL BE REQUIRED WHERE THE CONCRETE SIDEWALK ACCESS RAMP JOINS THE CURB AND ALSO WHERE NEW CONCRETE ABUTS EXISTING CONCRETE.

9. CURB RAMPS SHOULD BE PLACED PARALLEL TO THE DIRECTION OF TRAVEL.

CURB RAMPS – NOTES	DRAWN BY: C. NIX	REVISED 4/2019
TOWN OF GARNER, N.C.	APPROVED BY: C. JOHNSON	STD. NO. 5.07

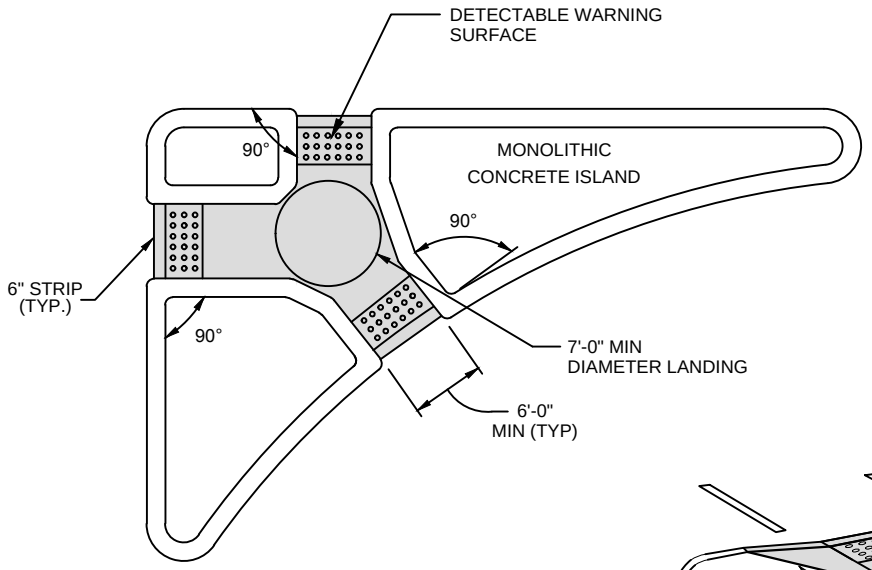

PAY LIMITS FOR CURB RAMP

TRIANGULAR ISLANDS MAY BE CONSTRUCTED WITH ONLY 2 POINTS OF ENTRY AND EXIT AS SHOWN IN THE ROADWAY PLANS.

TRIANGULAR ISLAND WITH CUT THROUGH

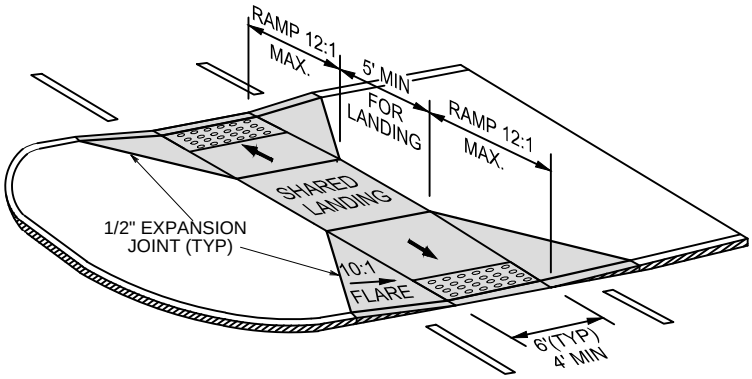

MEDIAN ISLAND CURB RAMPS

(MEDIANS WIDER THAN 20')

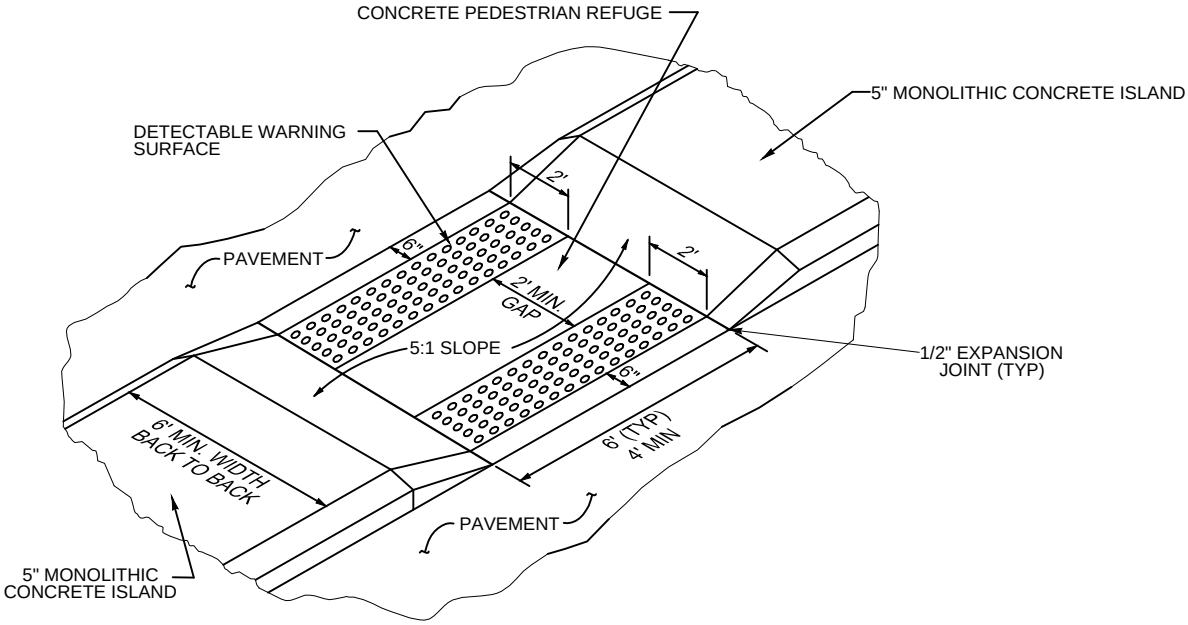

MEDIAN ISLAND WITH CUT THROUGH

(MEDIANS $\leq$ 20')

CURB RAMPS – MEDIAN ISLAND CUT–THROUGHS	DRAWN BY: C. NIX	REVISED 4/2019
TOWN OF GARNER, N.C.	APPROVED BY: C. JOHNSON	STD. NO. 5.08

ISOMETRIC VIEW

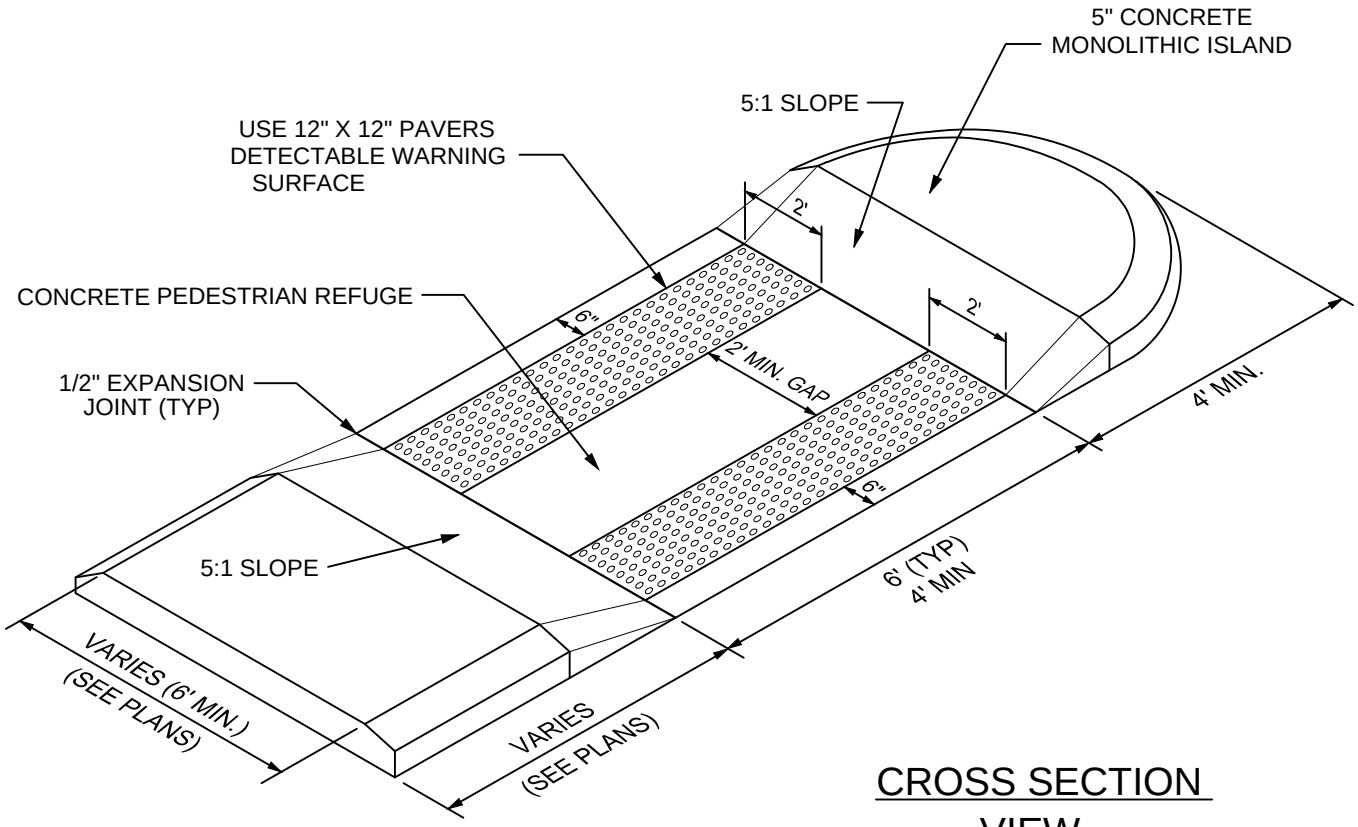

CROSS SECTION VIEW

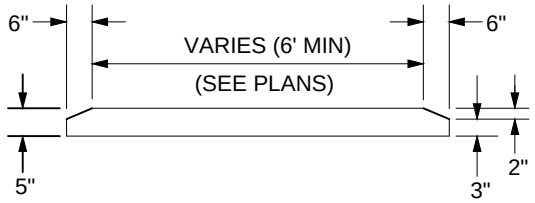

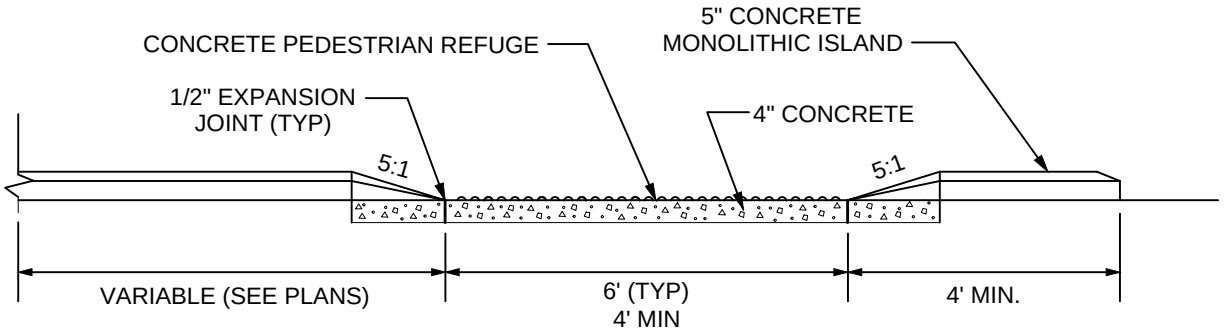

PROFILE VIEW

PEDESTRIAN REFUGE	DRAWN BY: C. NIX	REVISED 4/2019
TOWN OF GARNER, N.C.	APPROVED BY: C. JOHNSON	STD. NO. 5.09

TYPE N-1, N-1A & R-1

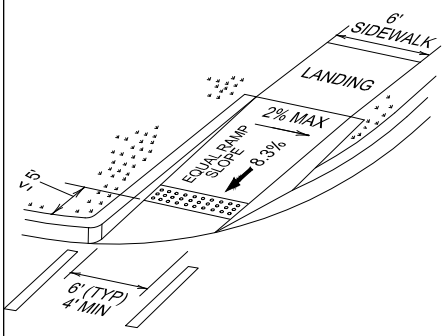

CROSS SLOPE NOT TO EXCEED 2% ON ANY PORTION OF RAMP OR TRANSITION TO STREET.

TYPE N-2 & N-3

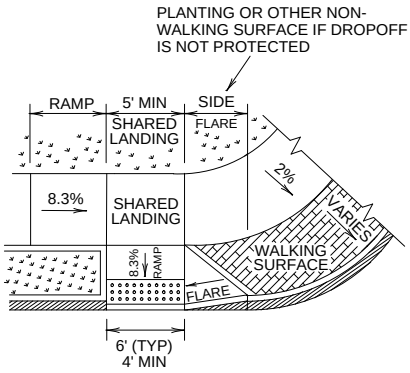

TYPE N-3A

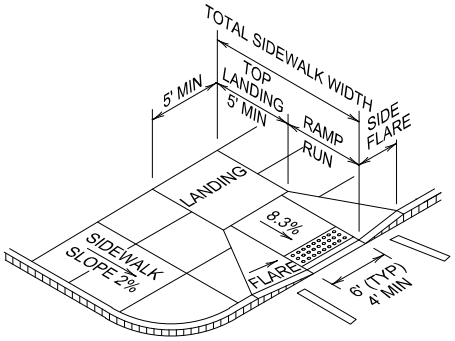

TYPE R-1A

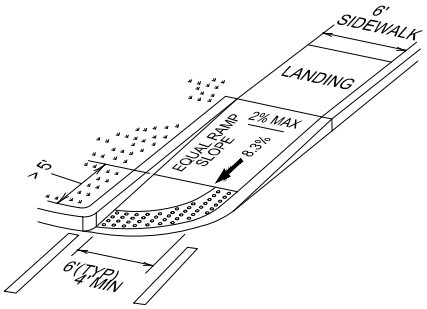

CROSS SLOPE NOT TO EXCEED 2% ON ANY PORTION OF RAMP OR TRANSITION TO STREET.

TYPE R-2

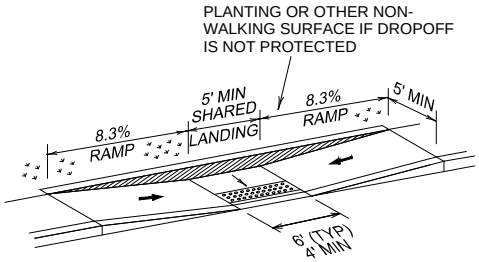

PARALLEL CURB RAMP

TYPE R-3

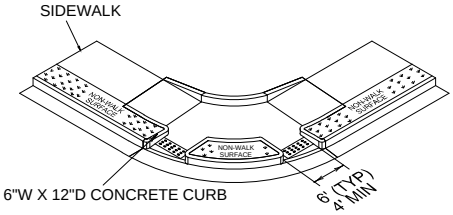

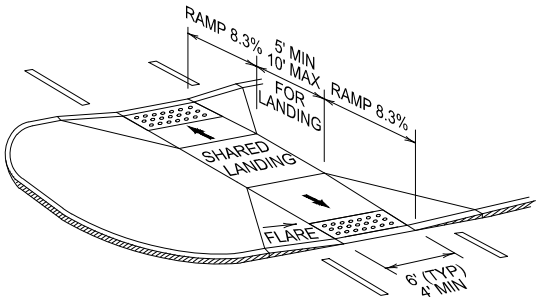

CURB RAMPS AT MEDIAN ISLANDS

DETECTABLE WARNING SURFACE SHALL EXTEND FULL WIDTH OF SIDEWALK OR RAMP

TYPE R-4

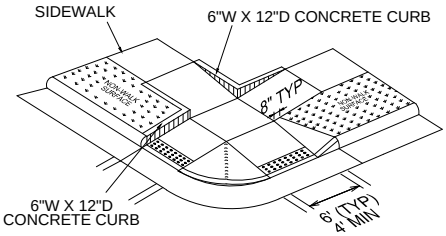

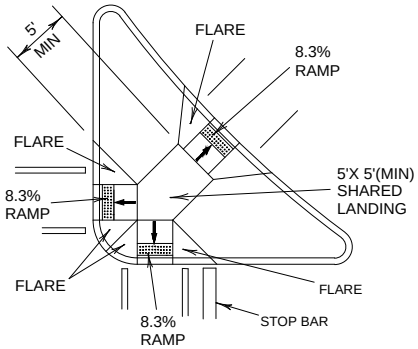

2' STRIP IF CUT THROUGH IS GREATER THAN 4' IN LENGTH. OTHERWISE PLACE DETECTABLE WARNING ON THE ENTIRE SURFACE OF CUT THROUGH.

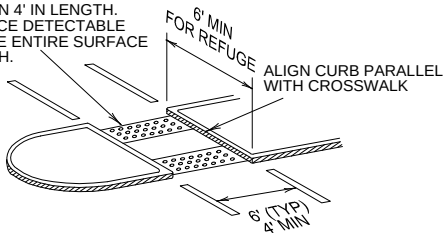

LOCATIONS OF DETECTABLE WARNING SURFACES	DRAWN BY: C. NIX	REVISED 4/2019
TOWN OF GARNER, N.C.	APPROVED BY: C. JOHNSON	STD. NO. 5.10

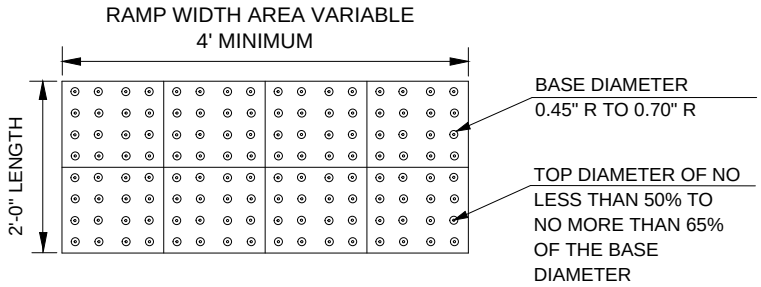

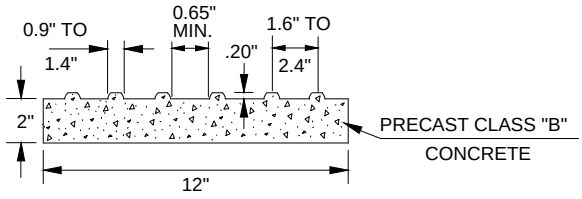

DETECTABLE WARNING
DOMES CONCRETE PAVER

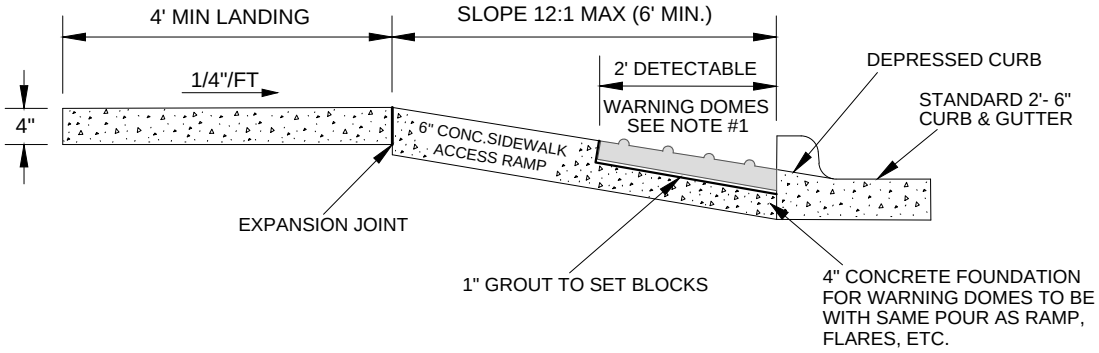

RAMP SECTION

WITH DETECTABLE WARNING PAVERS

NOTES:

1. DETECTABLE WARNING DOMES SHALL COVER 2'-0" LENGTH AND FULL WIDTH OF THE RAMP FLOOR AS SHOWN ON DETAIL. SIZE OF PAVER SHALL BE 1' X 1'.

2. THE COLOR FOR THE DETECTABLE WARNING AREA SHALL BE YELLOW, GRAY, CHARCOAL, OR BLACK FOR CONTRAST.

DETECTABLE WARNING SURFACE PAVERS	DRAWN BY: C. NIX	REVISED 4/2019
TOWN OF GARNER, N.C.	APPROVED BY: C. JOHNSON	STD. NO. 5.11

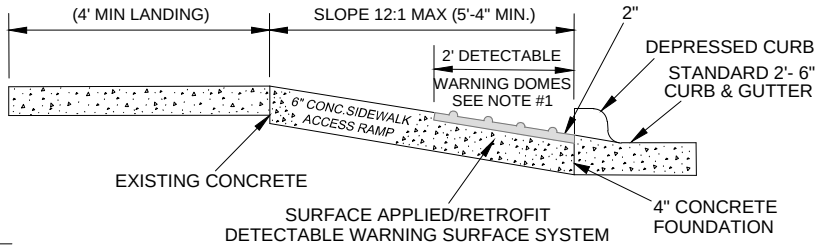

SECTION "A-A"

WITH DETECTABLE WARNING PAVERS

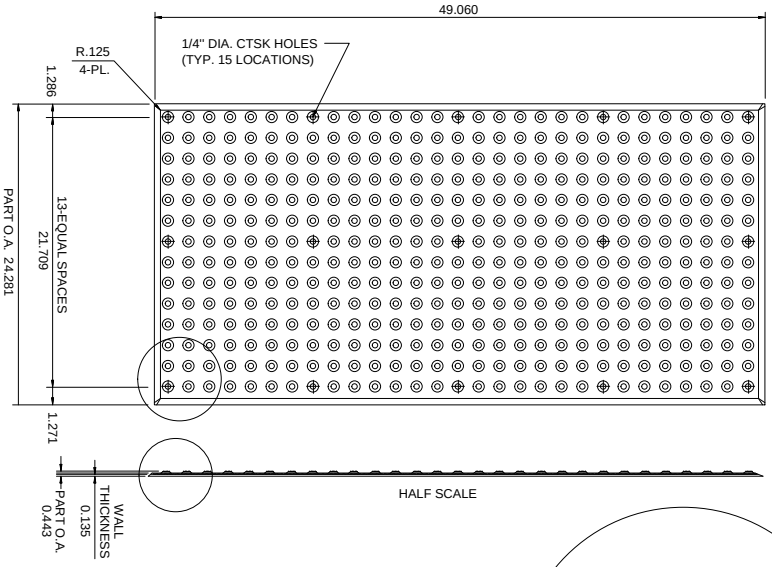

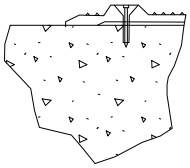

TILE INSTALLATION
VIEW B 4X SCALE

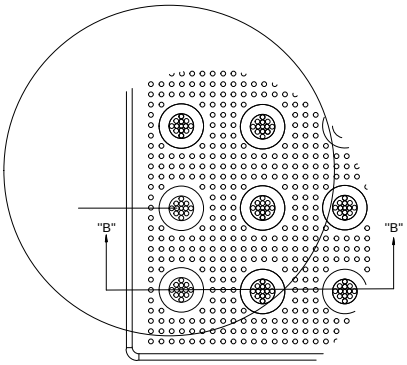

NOTE:

THIS APPLICATION ONLY TO BE USED WHEN RETRO FITTING EXISTING BARRIER FREE RAMPS

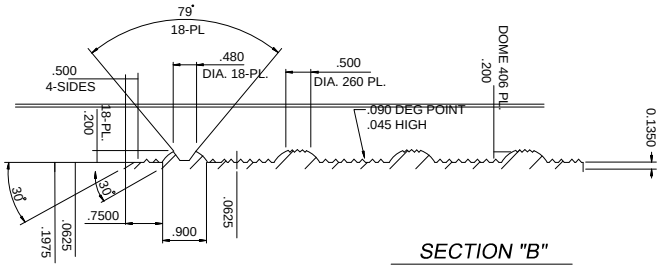

SECTION "B"

TYPICAL SECTION

NOTES:

1. DETECTABLE WARNING DOMES SHALL COVER 2'-0" LENGTH AND FULL WIDTH OF THE RAMP FLOOR AS SHOWN ON DETAIL.
2. THE COLOR FOR THE DETECTABLE WARNING AREA SHALL BE YELLOW, GRAY, CHARCOAL, OR BLACK FOR CONTRAST.

RETROFIT ONLY

DETECTABLE WARNING SURFACE–SURFACE APPLIED	DRAWN BY: C. NIX	REVISED 4/2019
TOWN OF GARNER, N.C.	APPROVED BY: C. JOHNSON	STD. NO. 5.12

RAMP SECTION

WITH DETECTABLE WARNING SURFACE
CAST-IN-PLACE SYSTEM

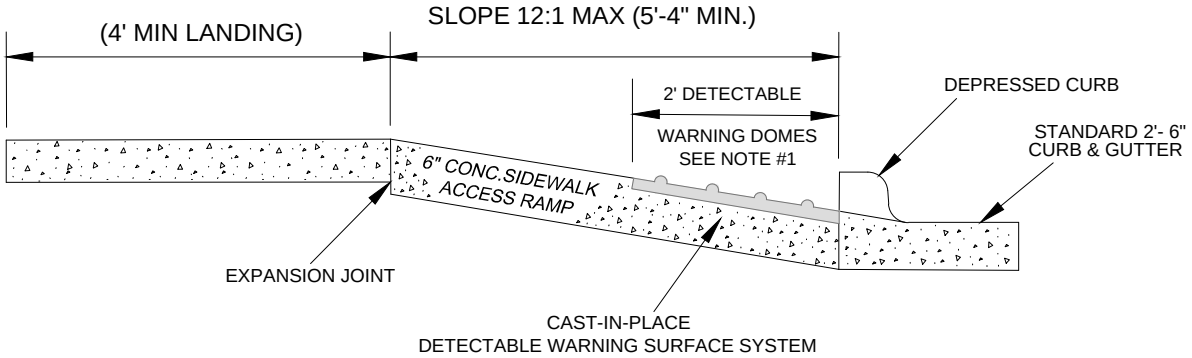

NOTES:

1. DETECTABLE WARNING DOMES SHALL COVER 2'-0" LENGTH AND FULL

2. THE COLOR FOR THE DETECTABLE WARNING AREA SHALL BE YELLOW, GRAY, CHARCOAL, OR BLACK FOR CONTRAST.

DETECTABLE WARNING SURFACE – CAST–IN–PLACE	DRAWN BY: C. NIX	REVISED 4/2019
TOWN OF GARNER, N.C.	APPROVED BY: C. JOHNSON	STD. NO. 5.13